ROCKPOINT®

USE AND CARE GUIDE
TV STAND WITH GLASS DOOR

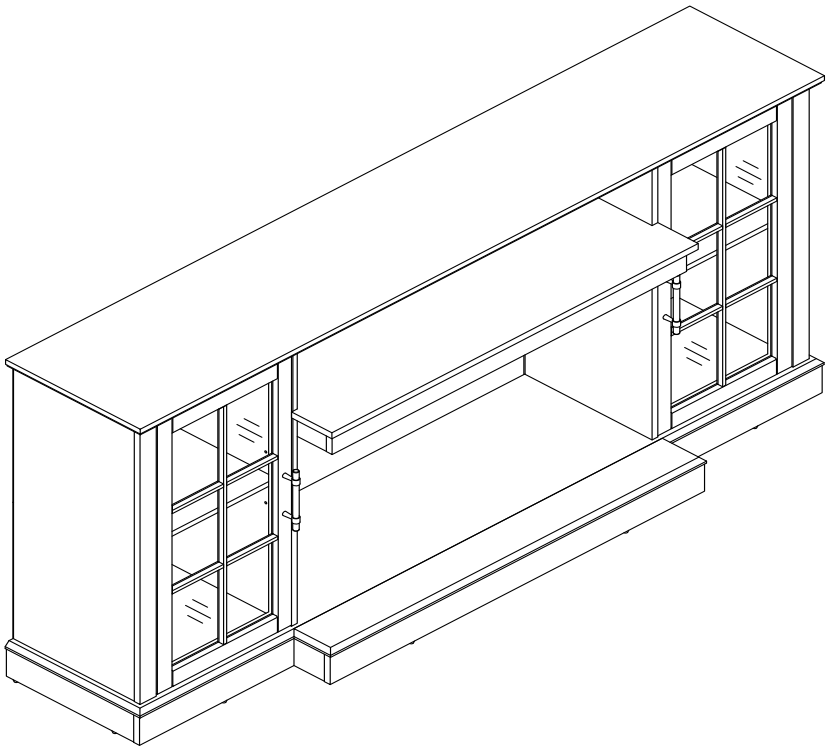

IMPORTANT
Questions,problems,assembly help,missing parts?

We will gladly help and ship your replacement parts free of charge.
If you have any question related to product please free to contact our customer service mail:Rockpointservice@hotmail.com
All the detail Assembly issue pls review the website:www.HiRockpoint.com

---

IMPORTANT

THIS INSTRUCTION CONTAINS IMPORTANT SAFETY INFORMATION.
PLEASE READ AND KEEP FOR FUTURE REFERENCE

WARNING

- Do not allow chlidren to climb on unit
- Serious or fatal crushing injuries can occur from furniture tip-over,To prevent this furniture from tipping over it must be permanently fixed to the wall.
- Fixing devices for the wall are not included since different wall materials require different types of fixing devices. Use fixing devices suitable for the walls in your home.For advice on suitable fixing systems,contact your local specialized dealer
- This unit contains small parts which can be swallowed by children and pets. Keep children and pets away during assembly. To avoid danger of suffocation, always keep plastic bags away from children and pets.

BEFORE YOU START

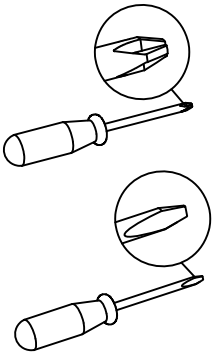

- Separate and count all parts and hardware.
- Have the following tools: Flat head Screwdriver,#2 Philips Head Screwdriver.
- If using a power tools,please be ware to slow down and stop when screw is tight.Failure to do so may result in stripping the screw.
- Requires two people for assembly.

CAM LOCK FASTENING SYSTEM

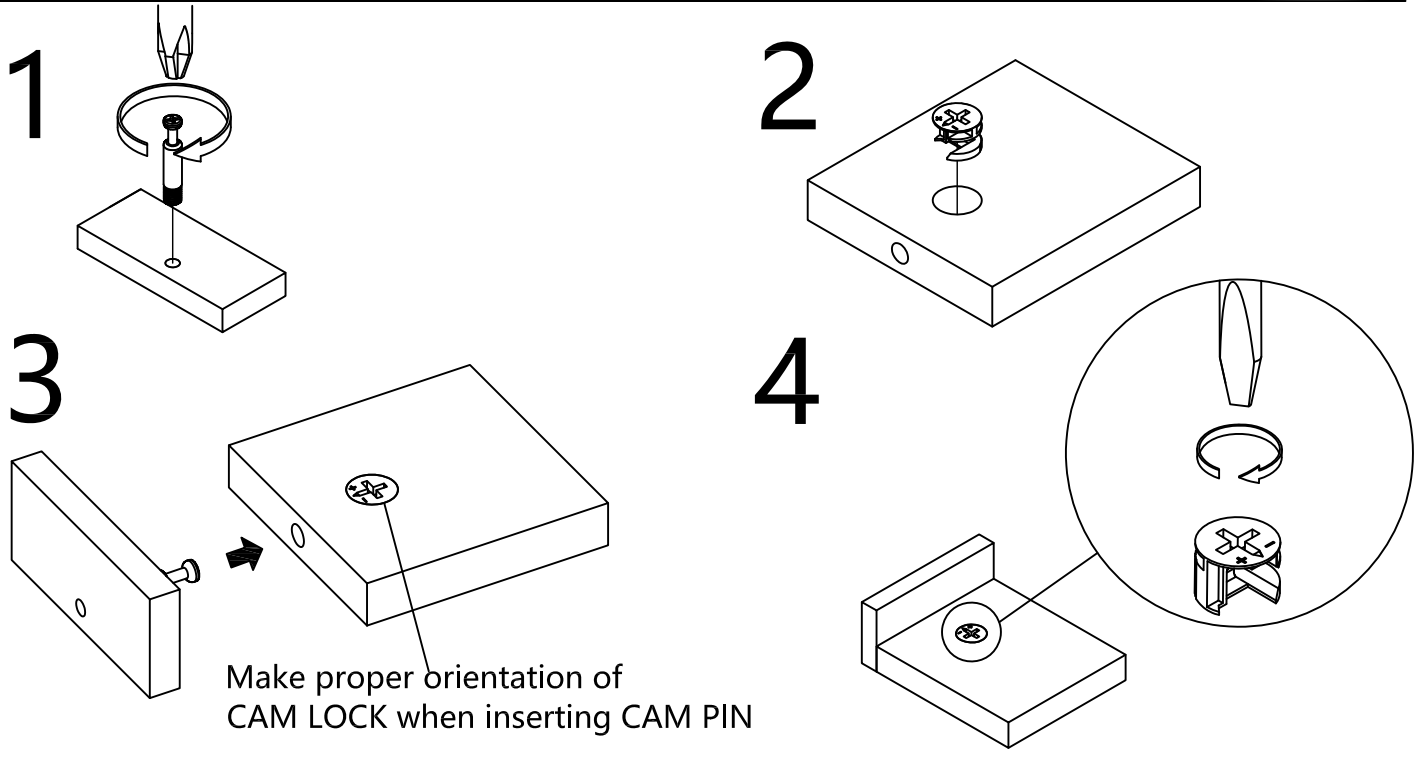

BOARD IDENTIFICATION

NOT SHOW ACTUAL SIZE

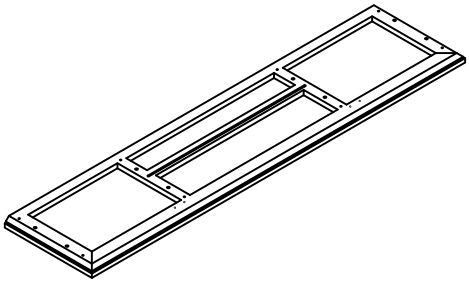

Ⓐ X1

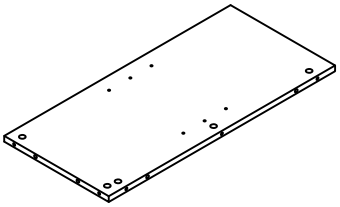

Ⓑ X1

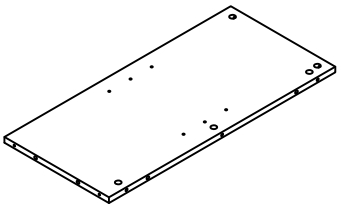

Ⓒ X1

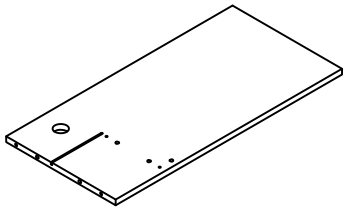

Ⓓ X1

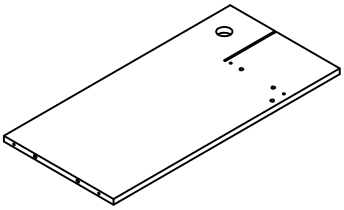

Ⓔ X1

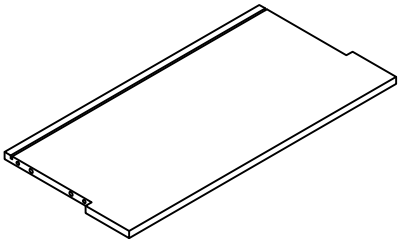

Ⓕ X1

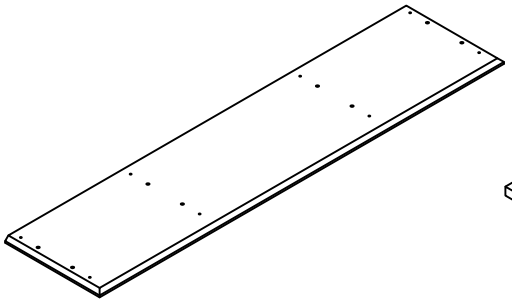

Ⓖ X1

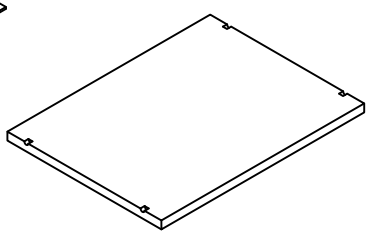

Ⓗ X2

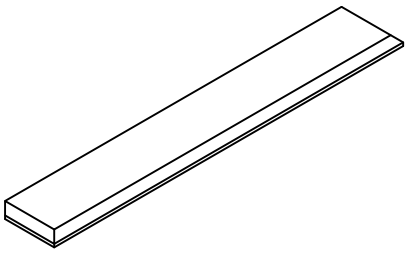

Ⓘ X1

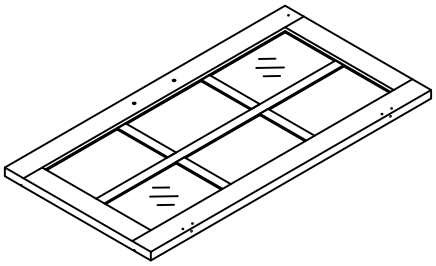

Ⓙ X1

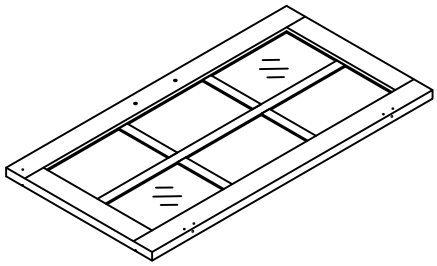

Ⓚ X1

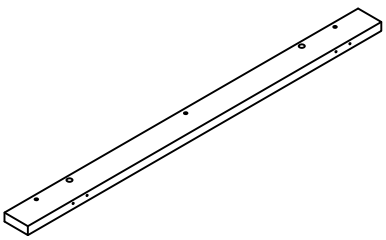

Ⓛ X2

BOARD IDENTIFICATION

NOT SHOW ACTUAL SIZE

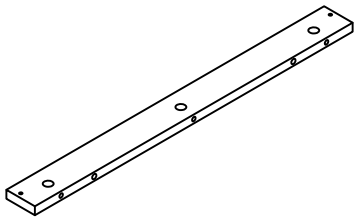

Ⓜ X1

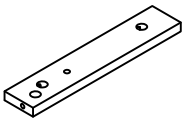

Ⓝ X1

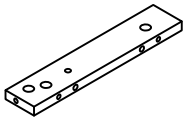

Ⓞ X1

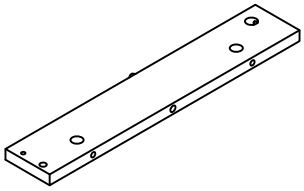

Ⓟ X1

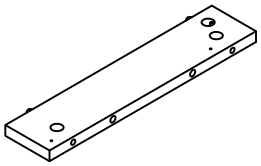

Ⓠ X1

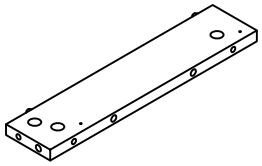

Ⓡ X1

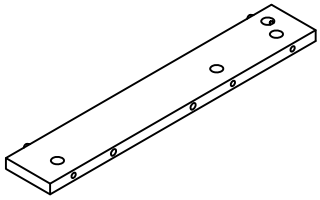

Ⓢ X1

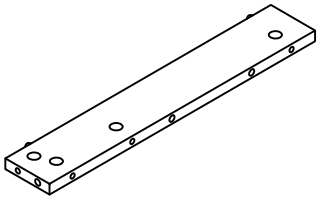

Ⓣ X1

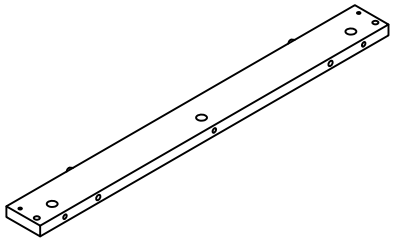

Ⓤ X1

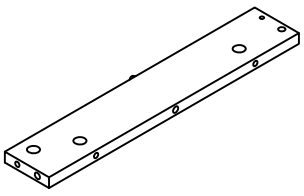

Ⓥ X1

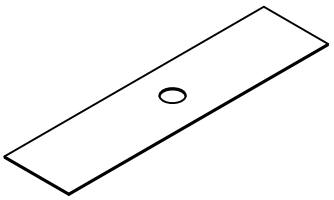

Ⓦ X1

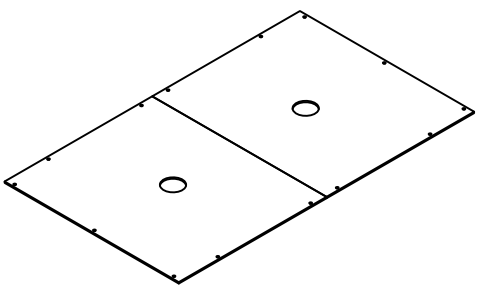

Ⓧ X2

Part List

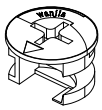

Ø15X11mm

1	X50

CAM LOCK
spare:2

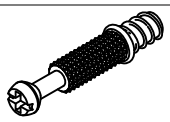

Ø6.5X35mm

2	X50

CAM BOLT
spare:2

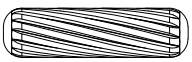

Ø8X30mm

3	X48

WOODEN DOWEL
spare:2

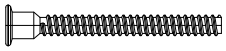

Ø6.3X50mm

4	X8

SCREW
spare:1



M6X25mm

5	X2

SCREW

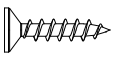

Ø3.5X14mm

6	X34

SCREW
spare:2

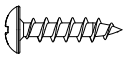

Ø3X14mm

7	X28

SCREW
spare:2



8	X8

SHELF SUPPORT
spare:1



M4X22mm

9	X4

SCREW



10	X4

ANGLE IRON

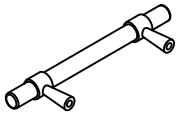

11	X2

HANDLE

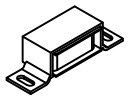

12	X2

MAGNET

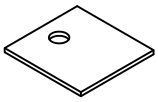

13	X2

METAL PLANT

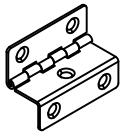

14	X4

HINGE

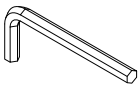

M4X65mm

15	X1

HEX KEY

BOARD IDENTIFICATION

NOT SHOW ACTUAL SIZE

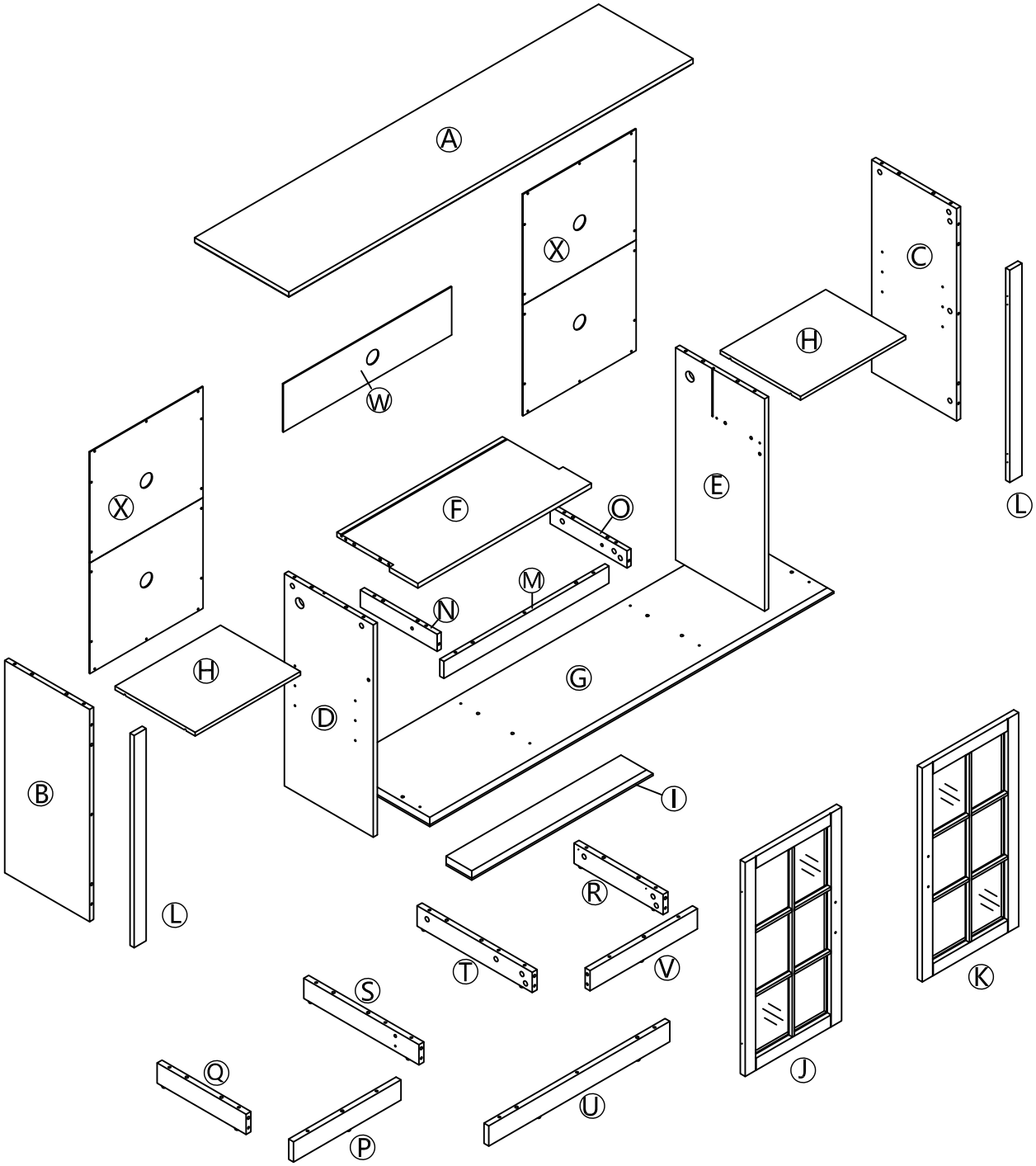

STEP 1

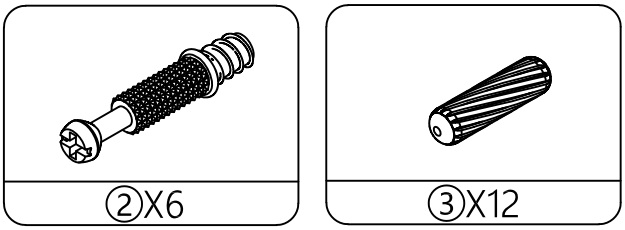

STEP 2

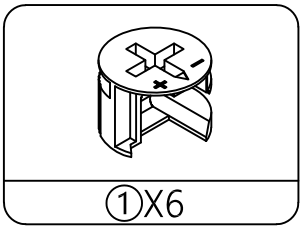

STEP 3

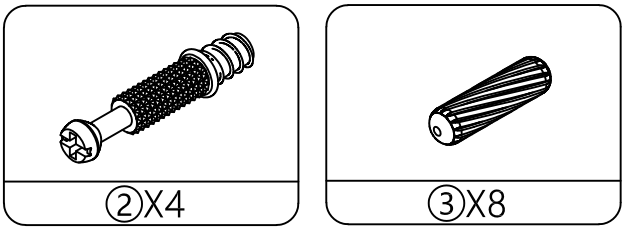

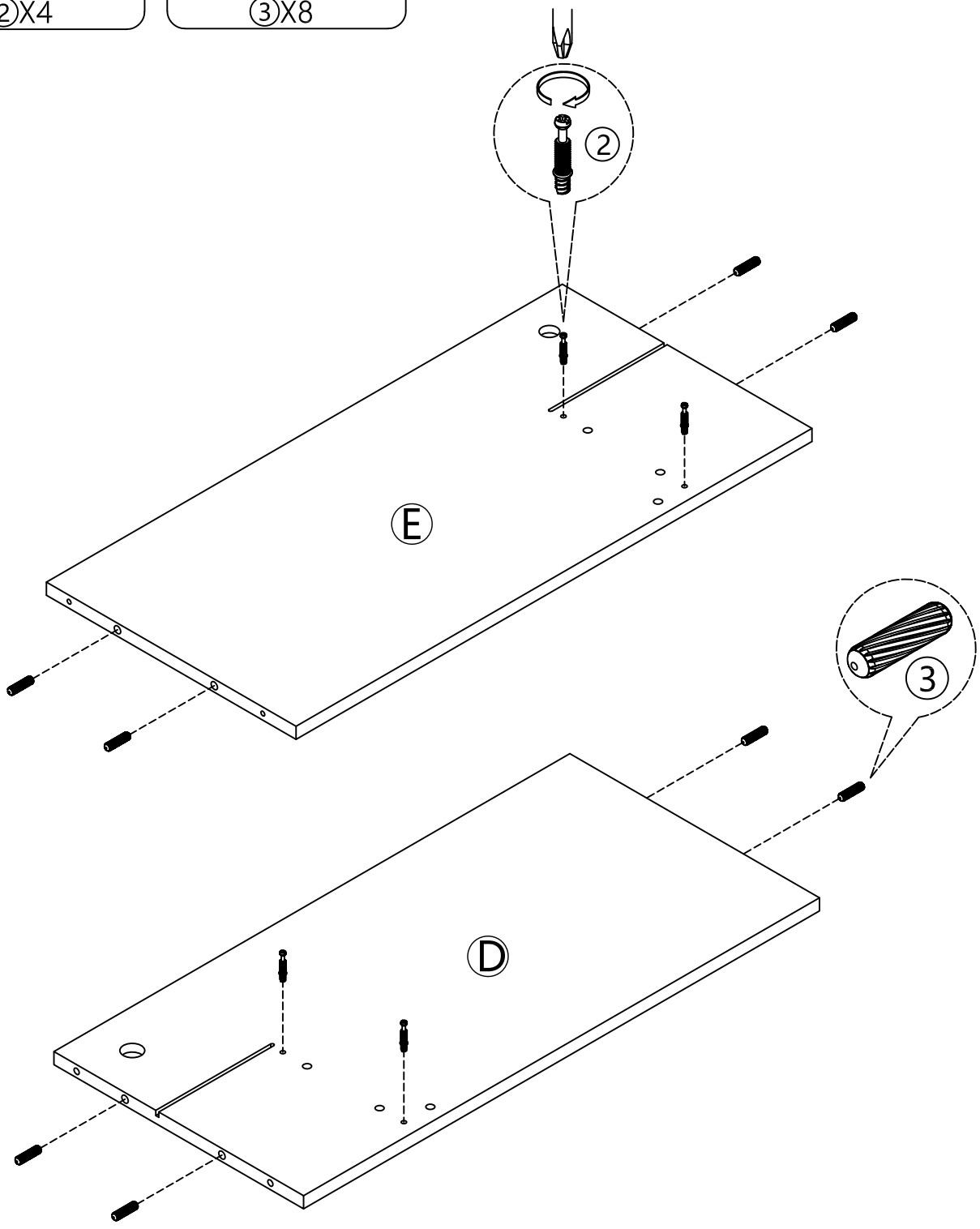

STEP 4

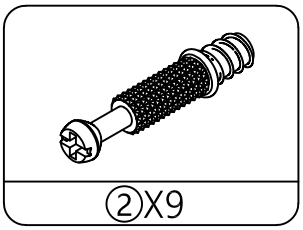

②X9

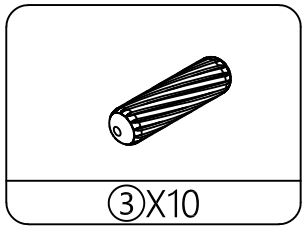

③X10

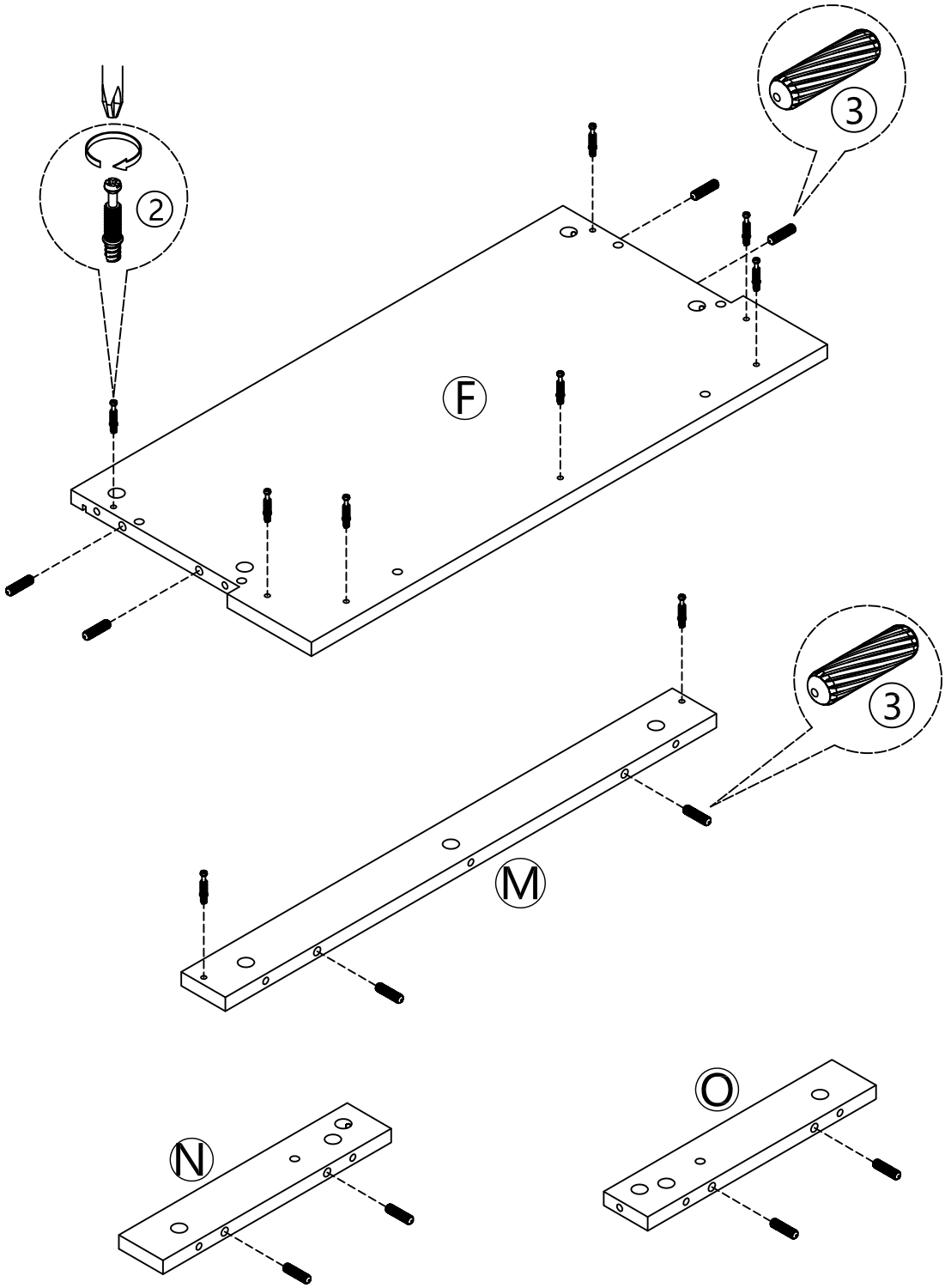

STEP 5

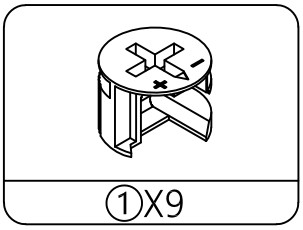

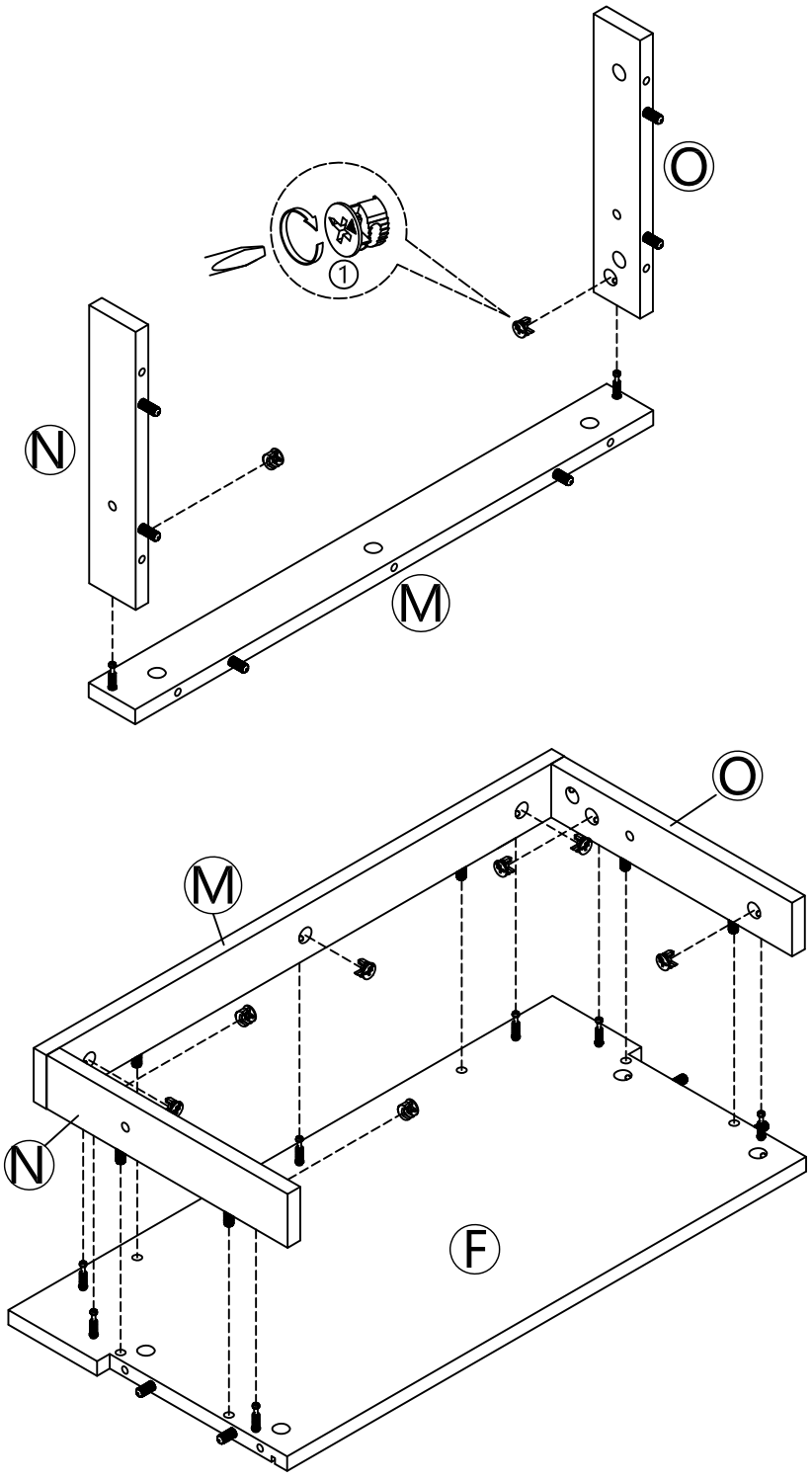

STEP 6

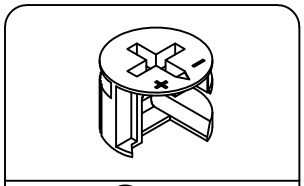

①X4

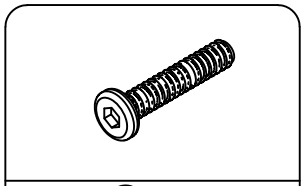

⑤X2

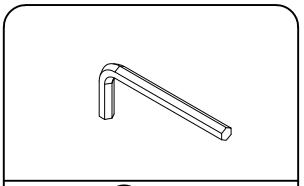

⑮X1

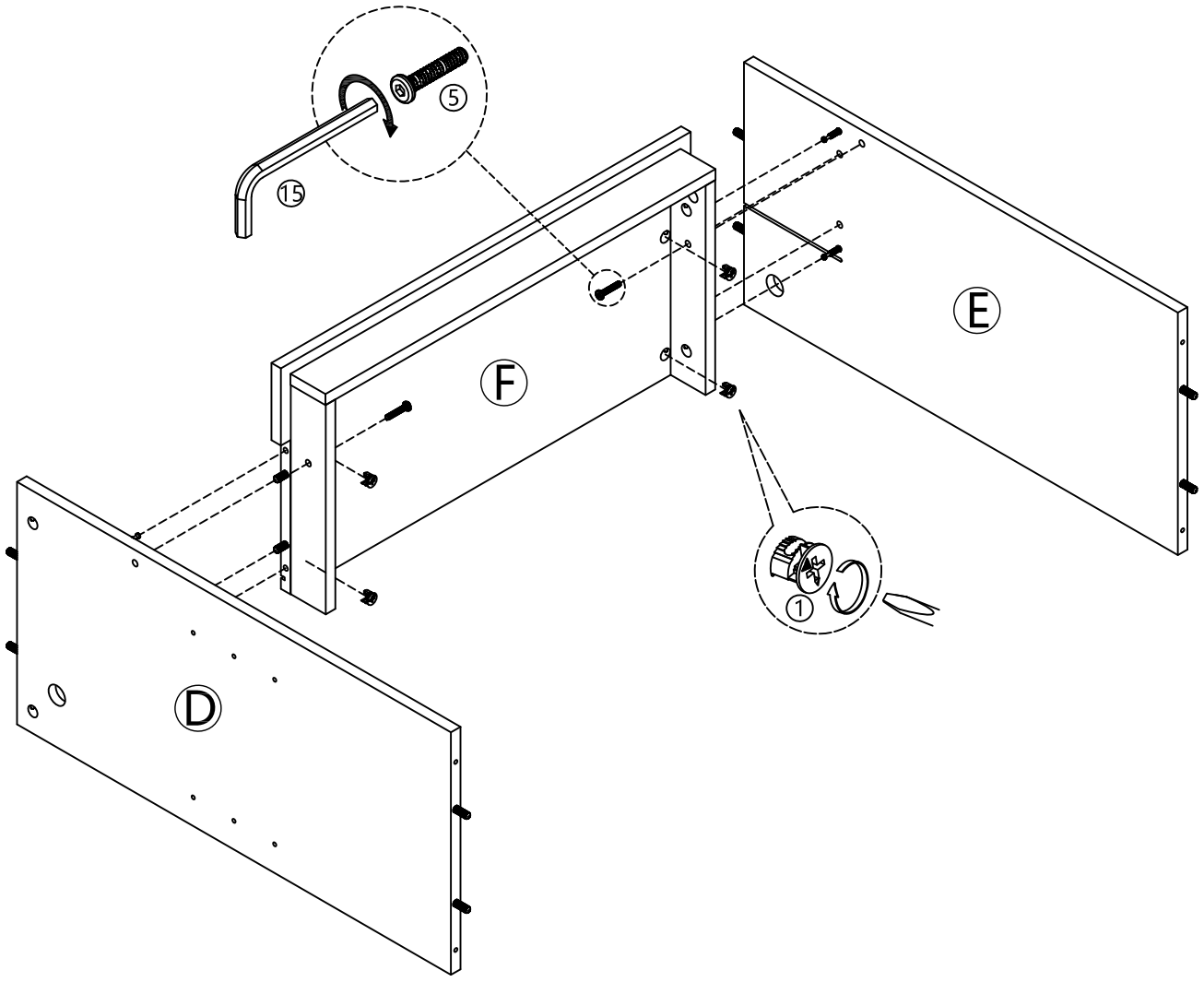

STEP 7

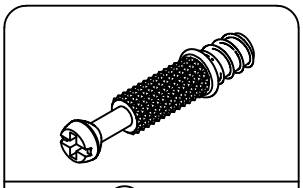

②X8

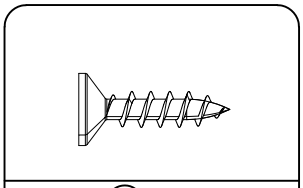

⑥X4

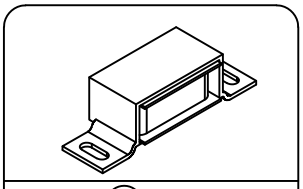

⑫X2

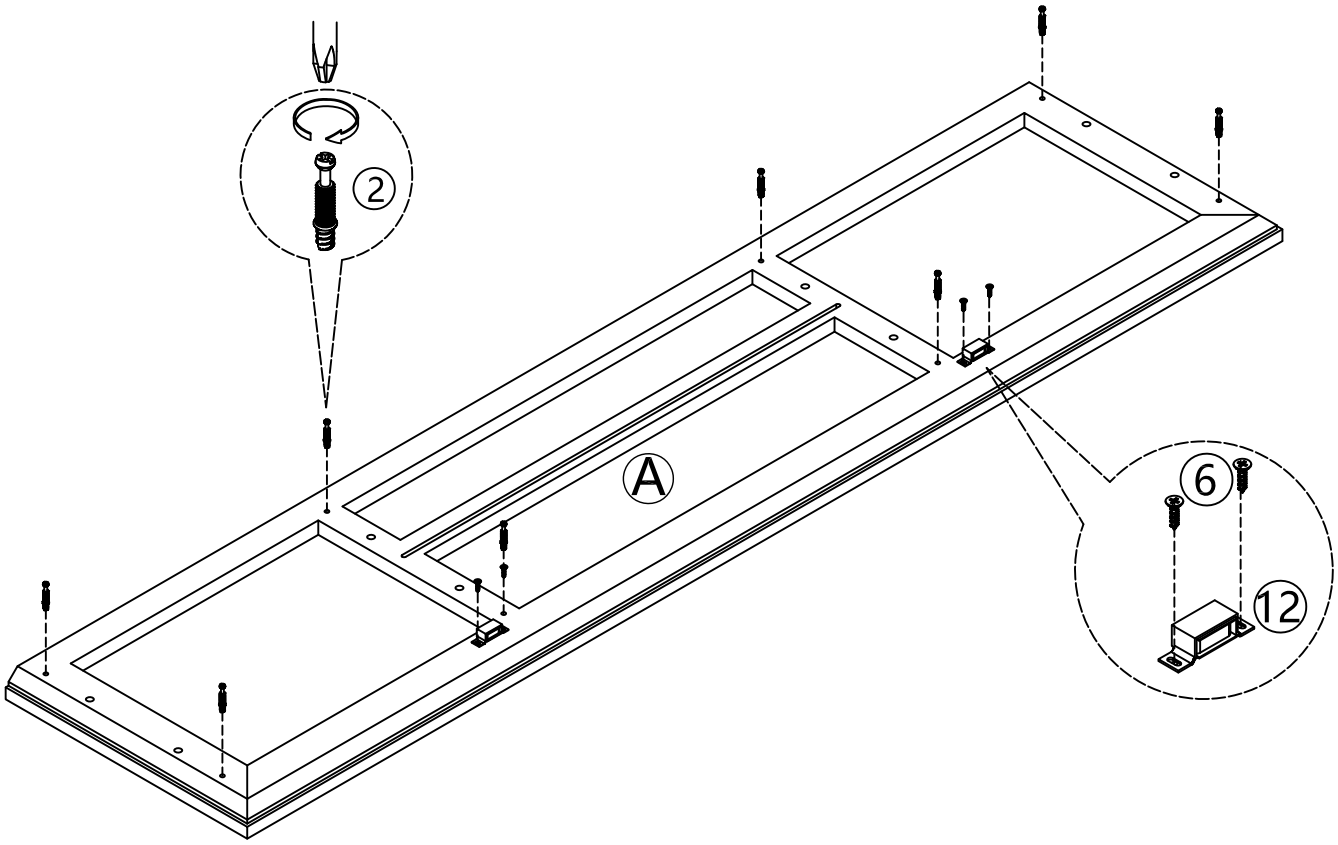

STEP 8

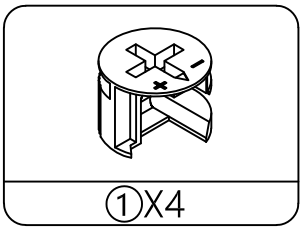

STEP 9

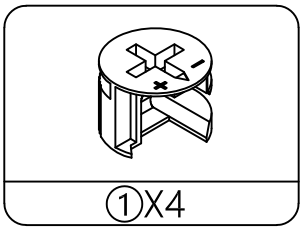

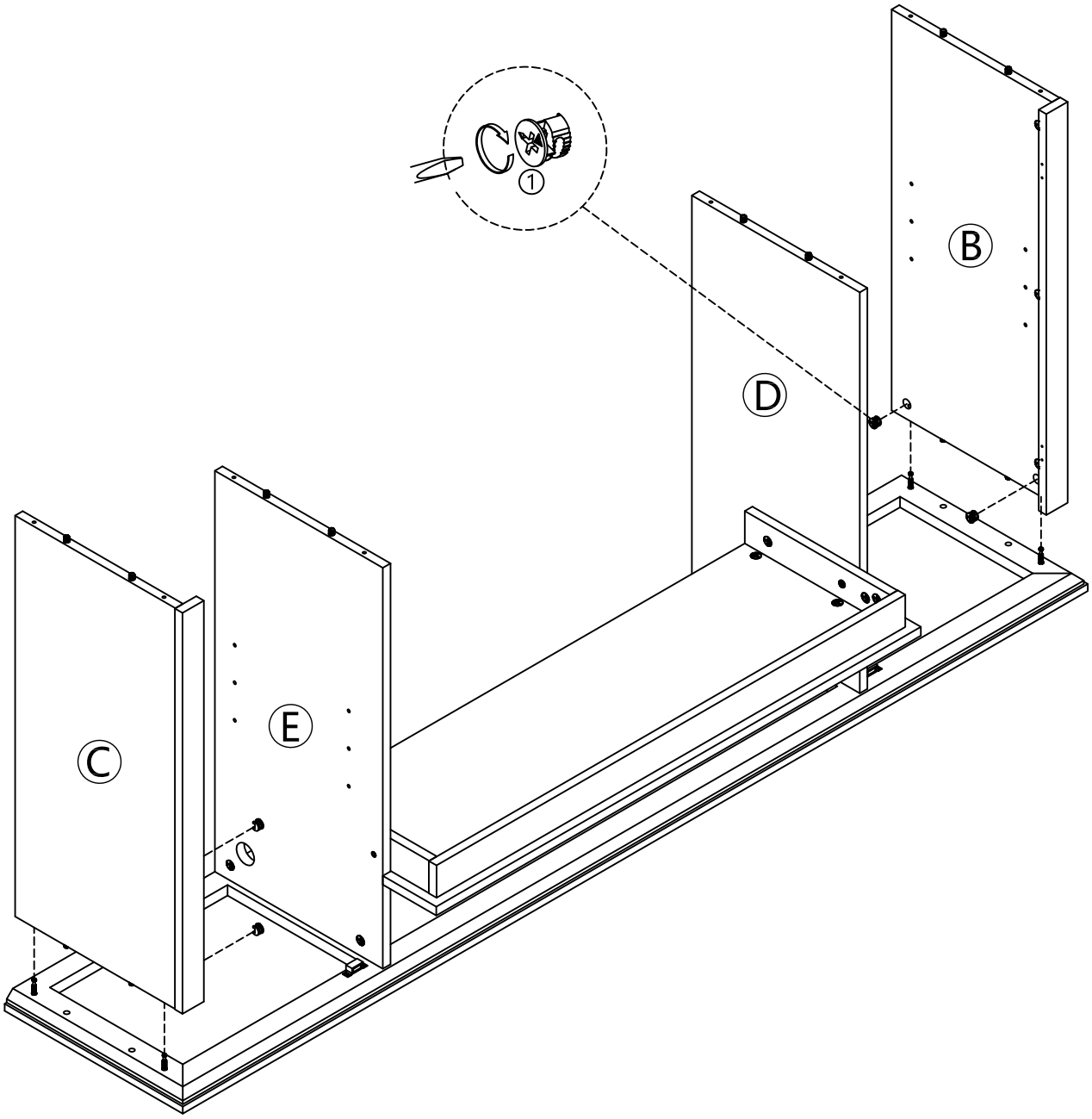

STEP 10

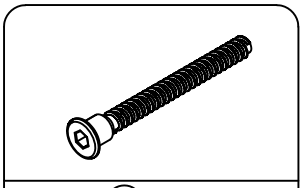

④X8

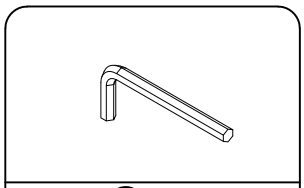

⑮X1

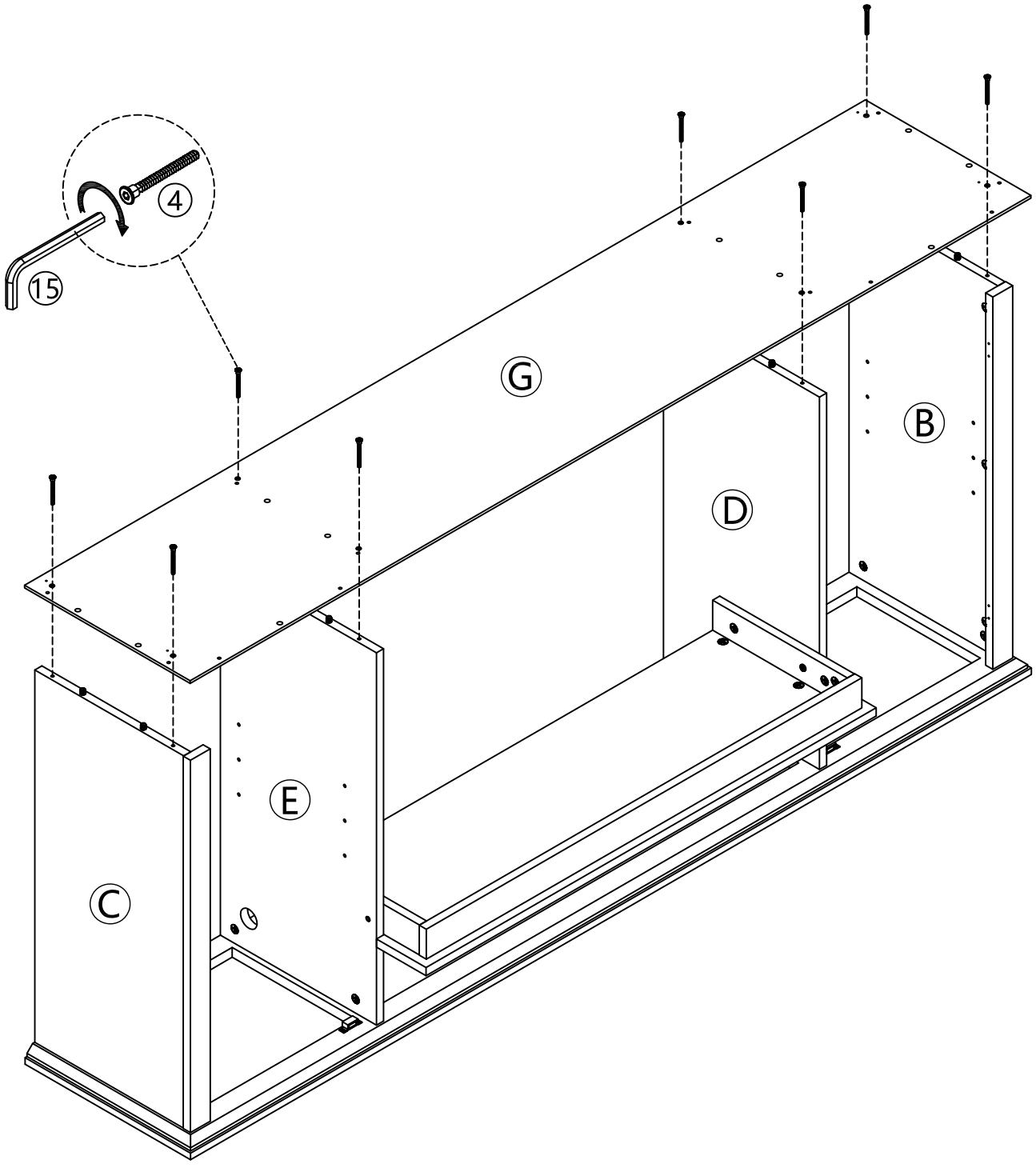

STEP 11

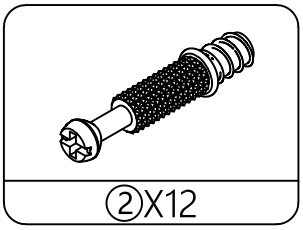

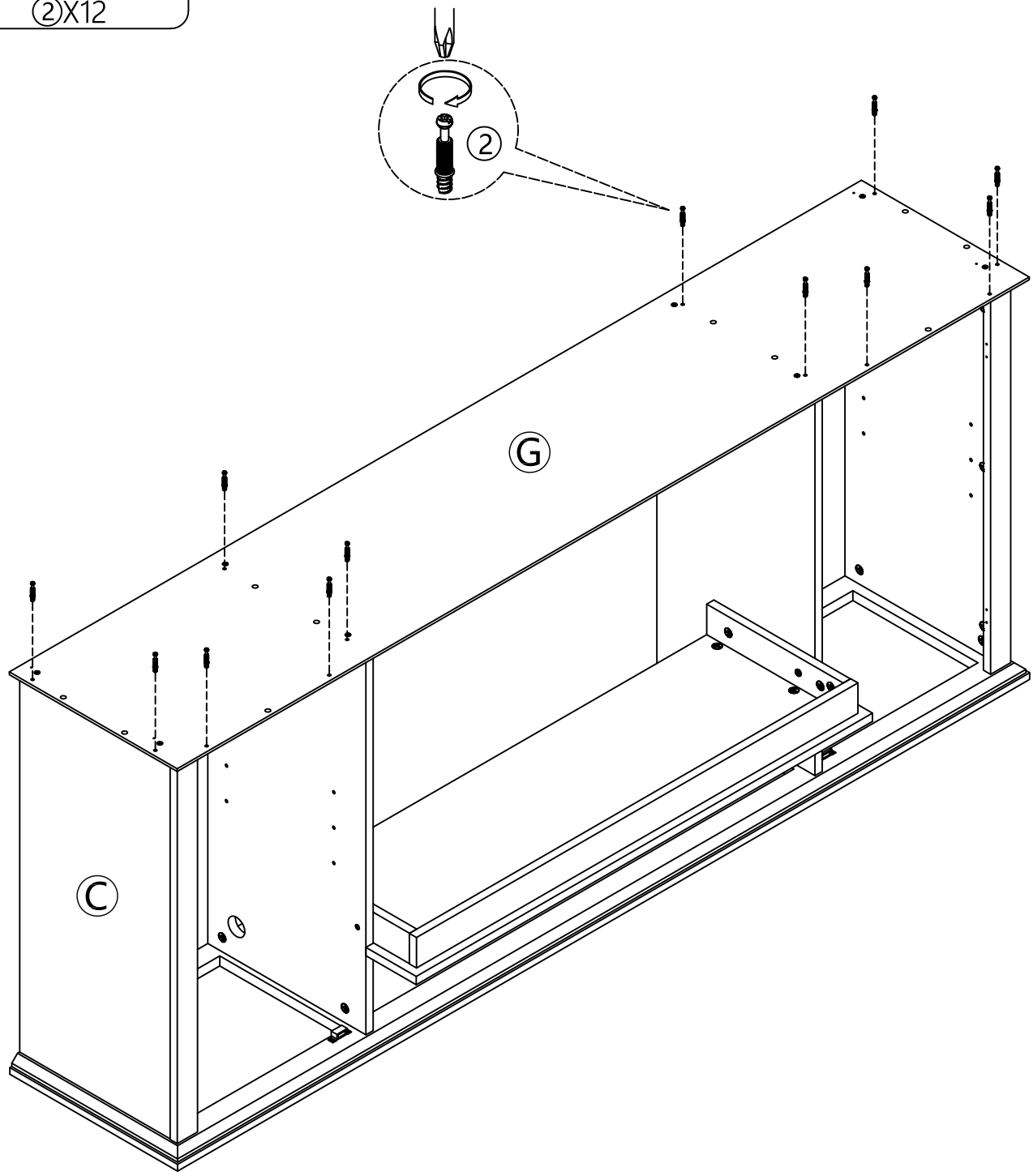

STEP 12

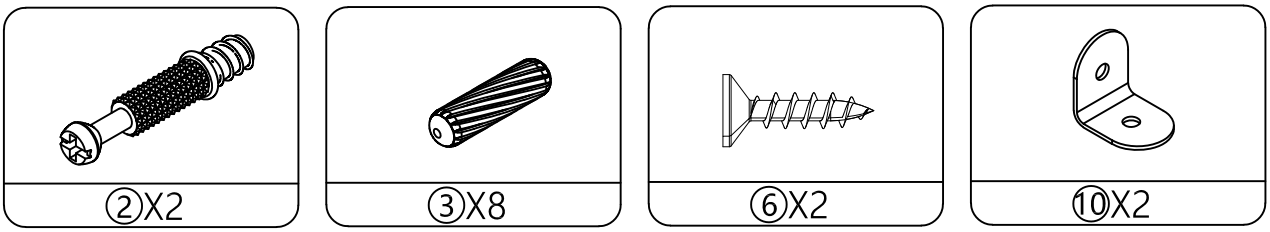

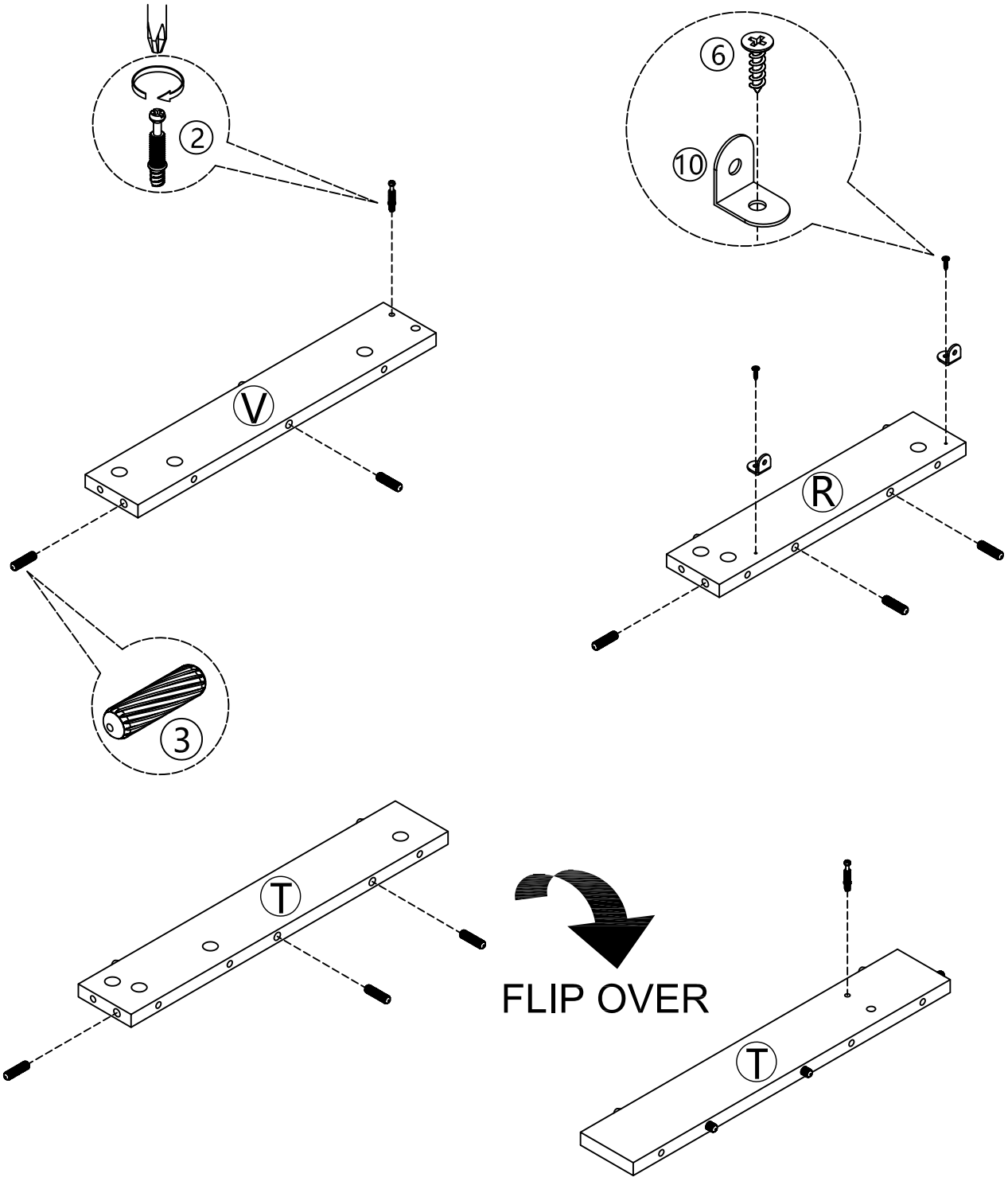

STEP 13

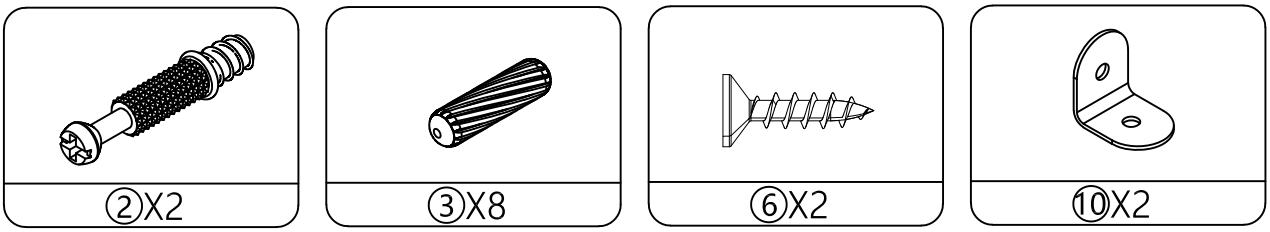

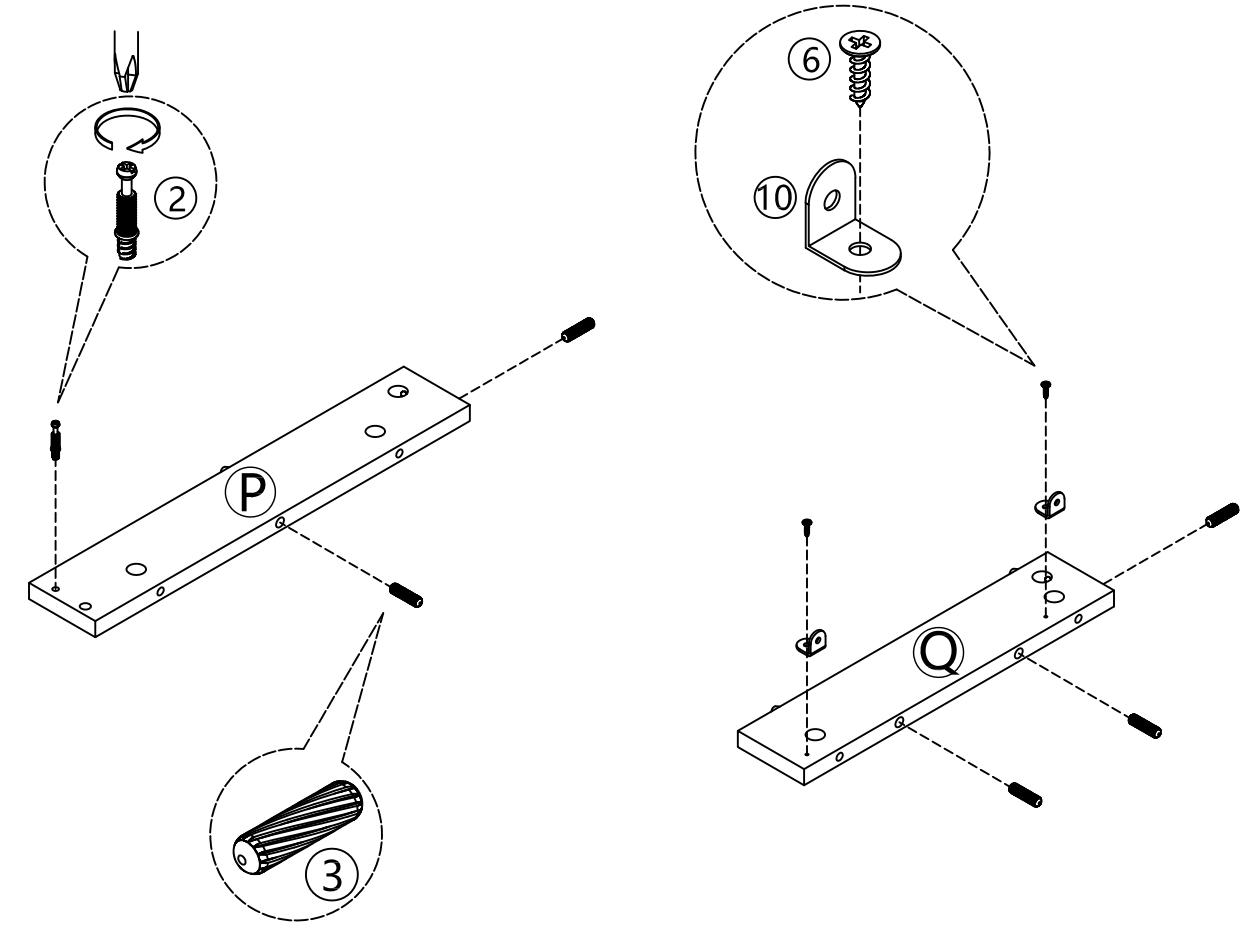

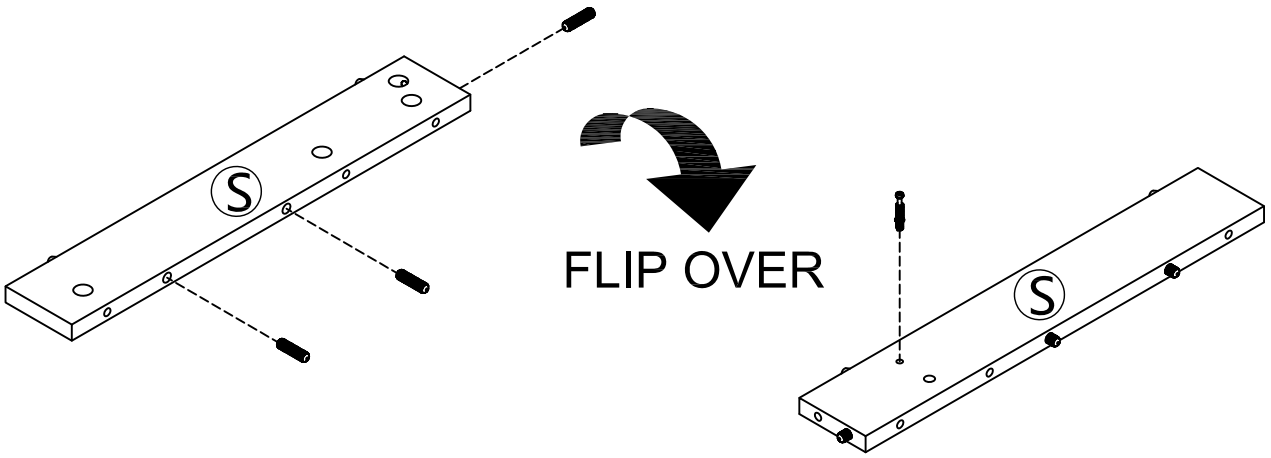

STEP 14

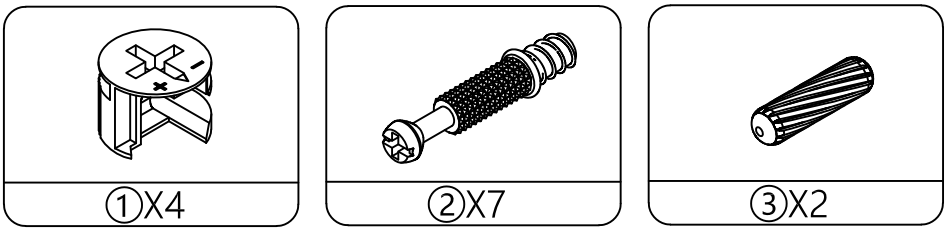

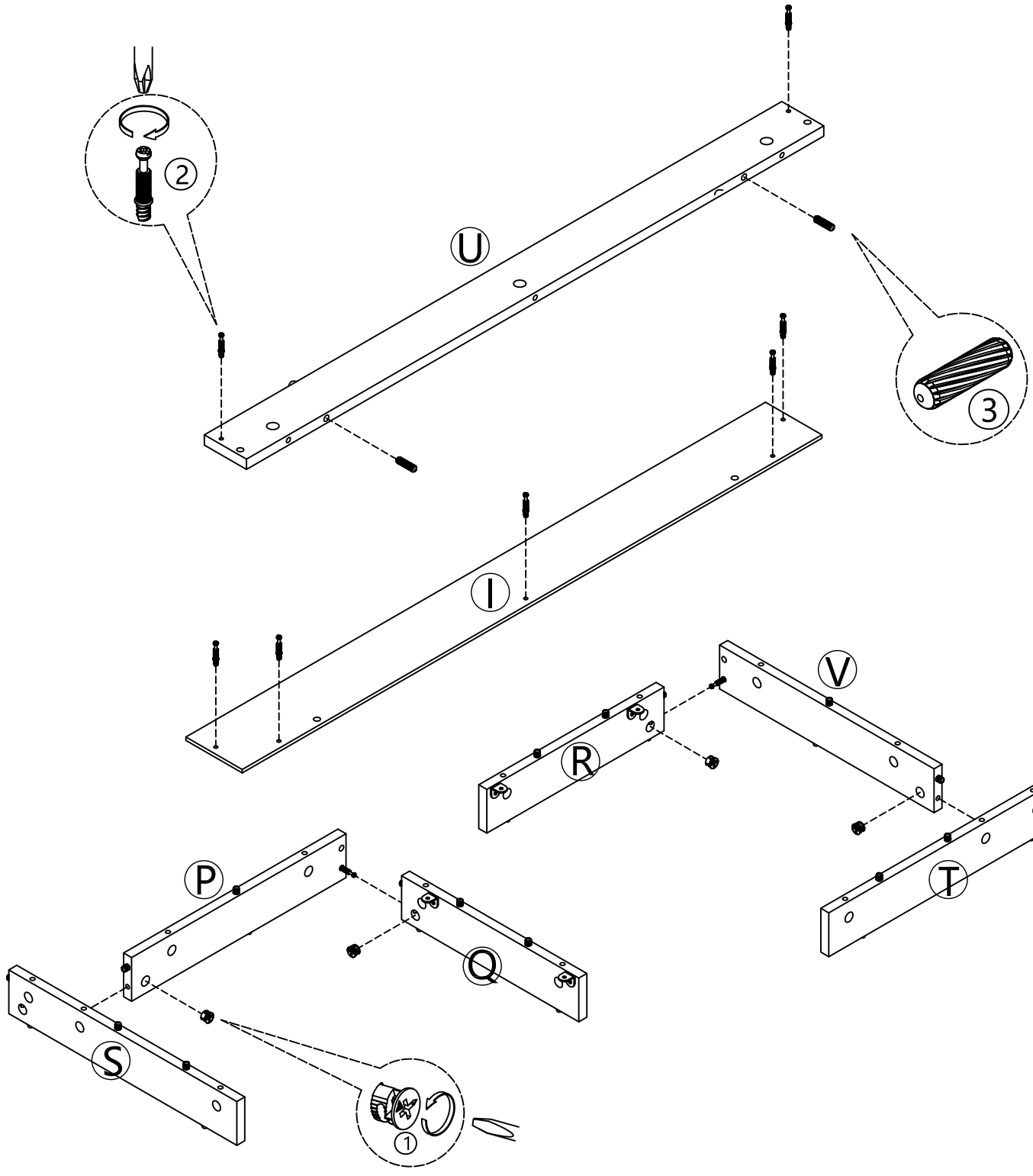

STEP 15

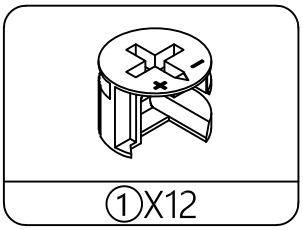

①X12

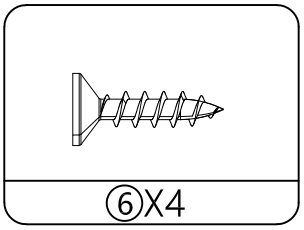

⑥X4

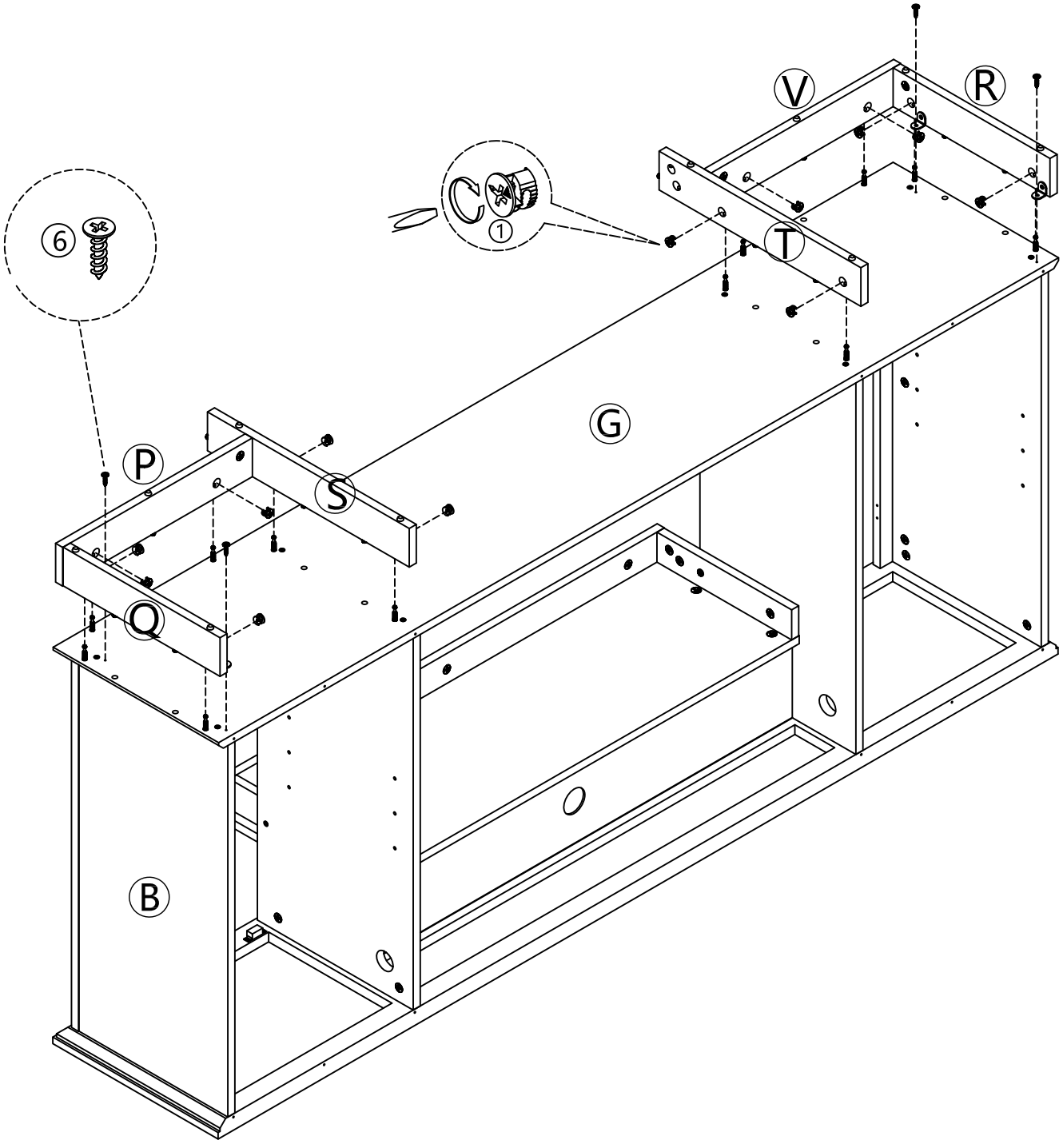

STEP 16

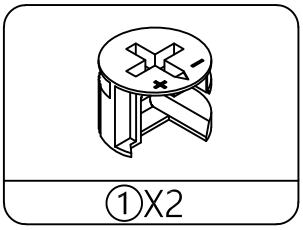

①X2

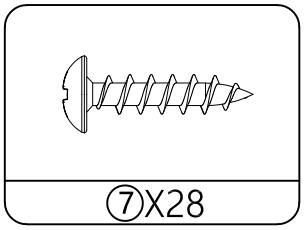

⑦X28

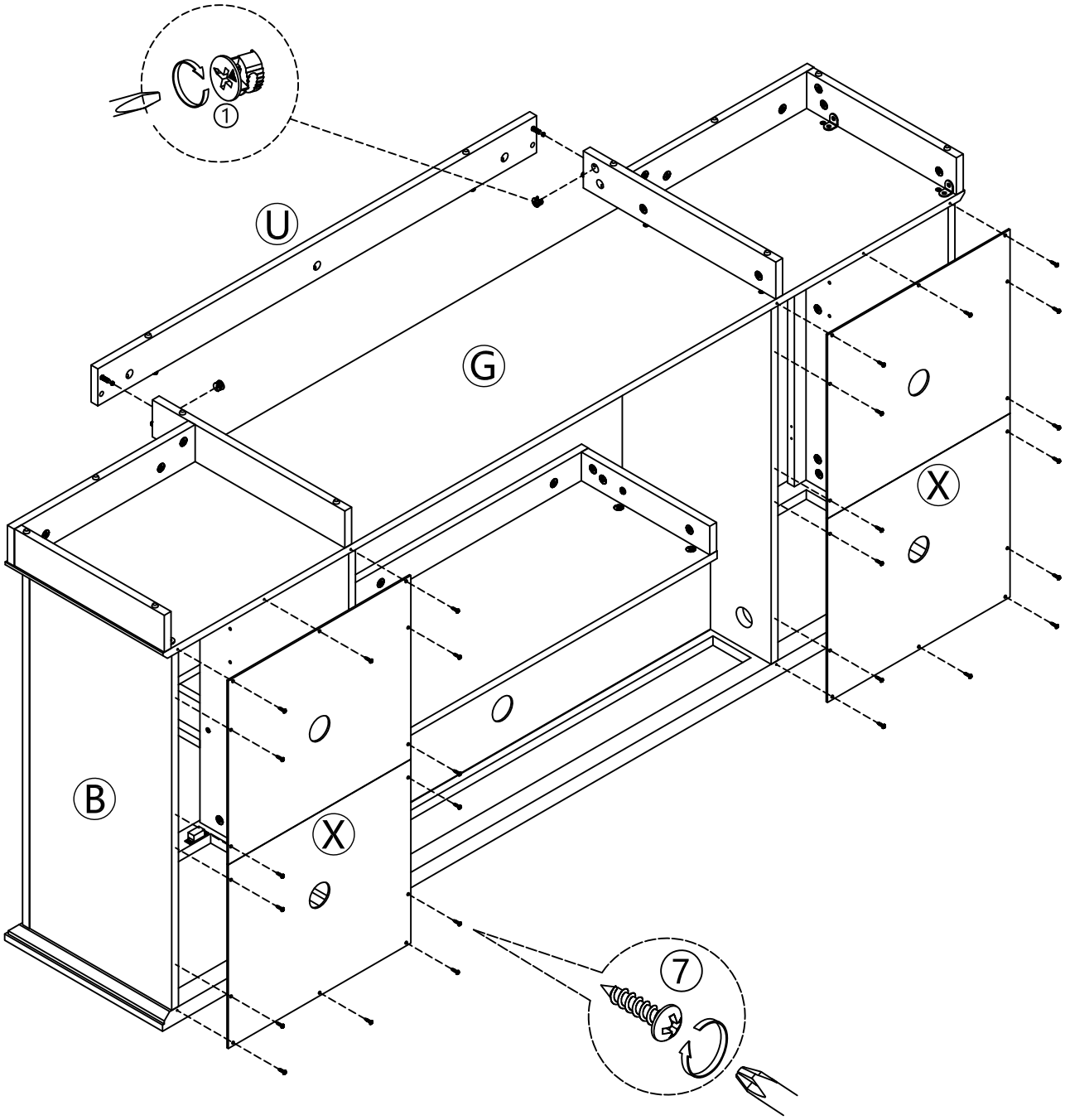

STEP 17

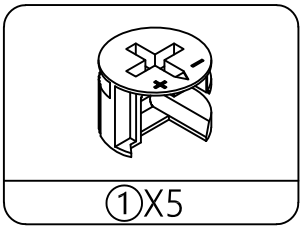

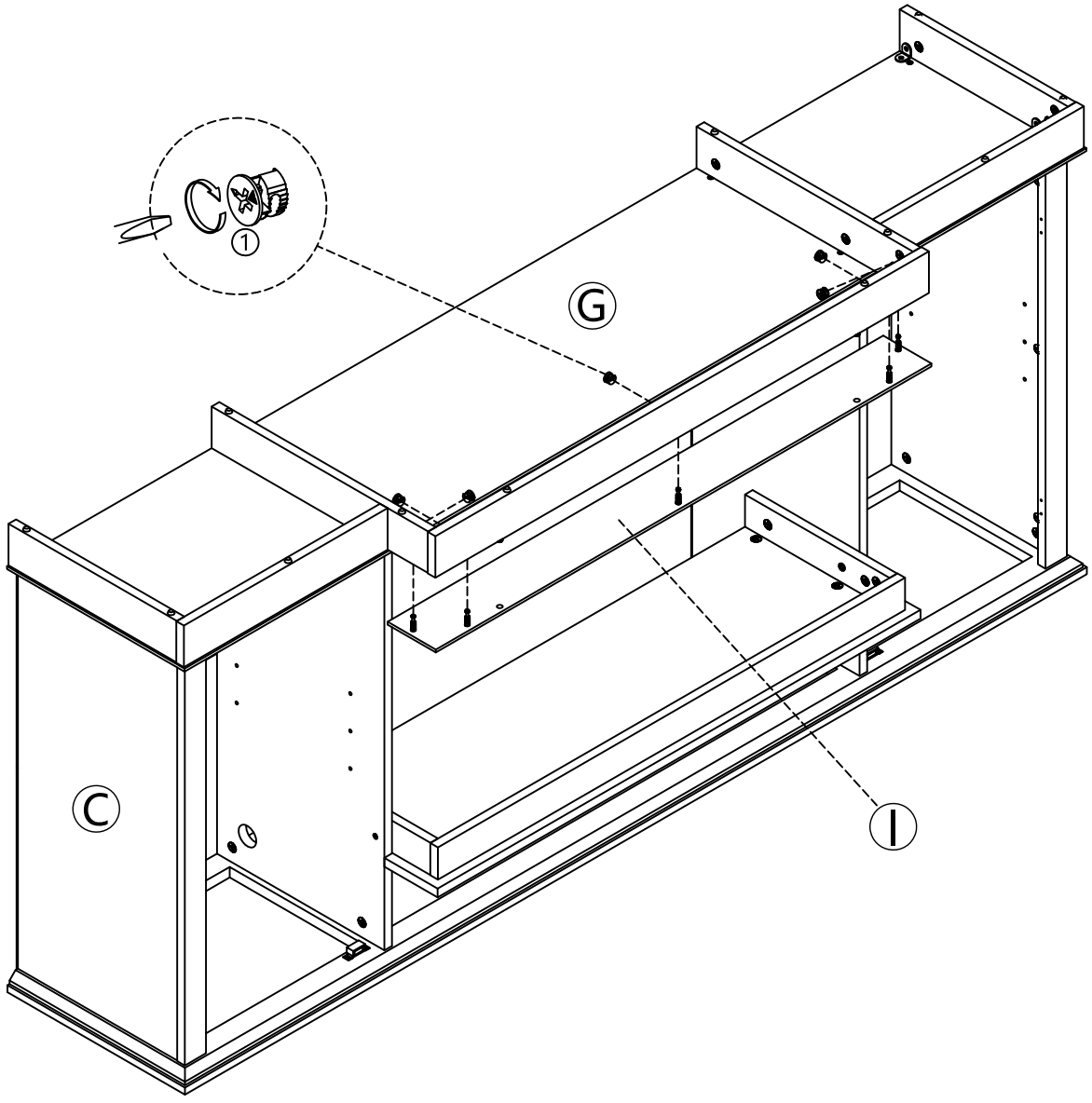

STEP 18

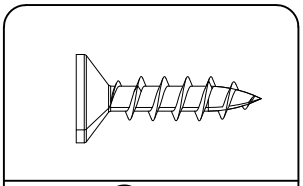

⑥X14

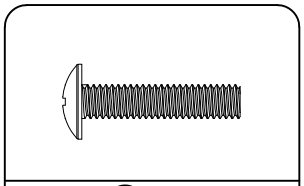

⑨X4

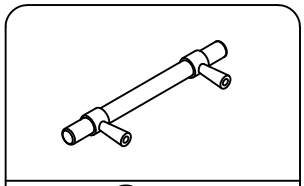

⑪X2

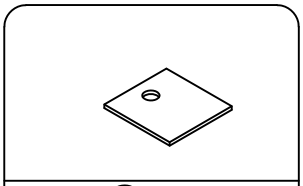

⑬X2

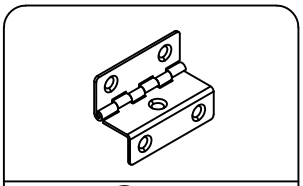

⑭X4

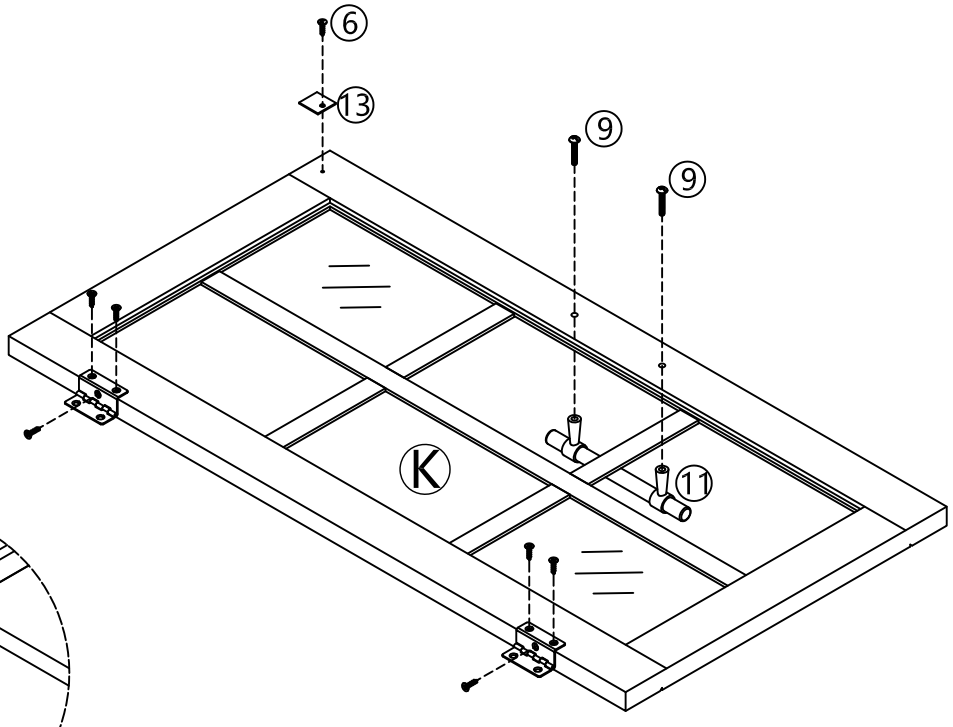

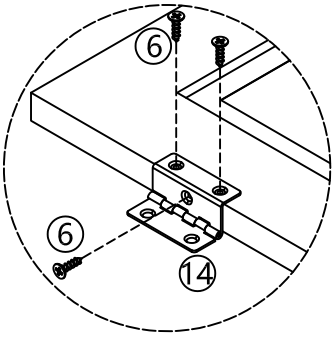

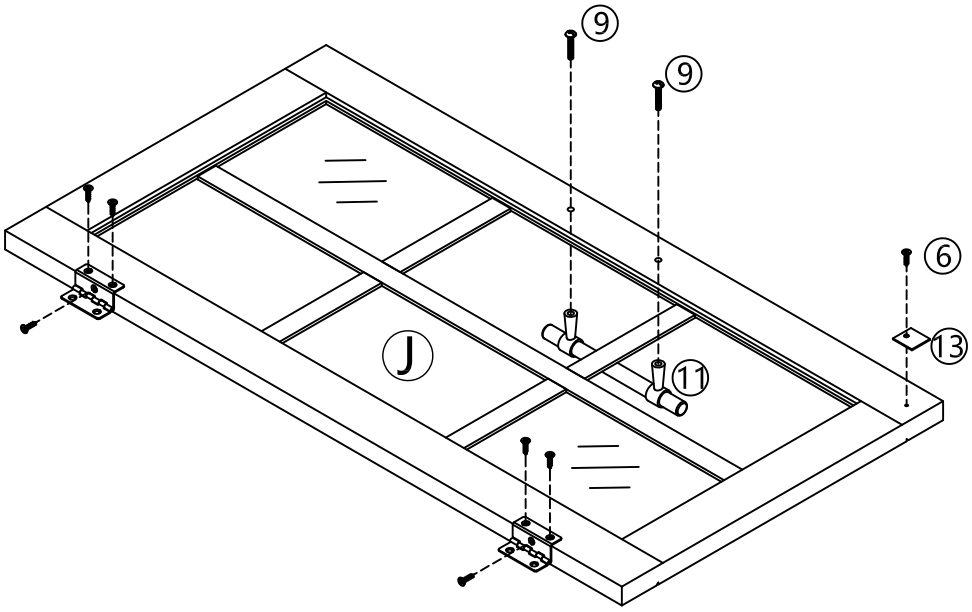

STEP 19

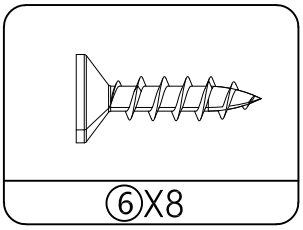

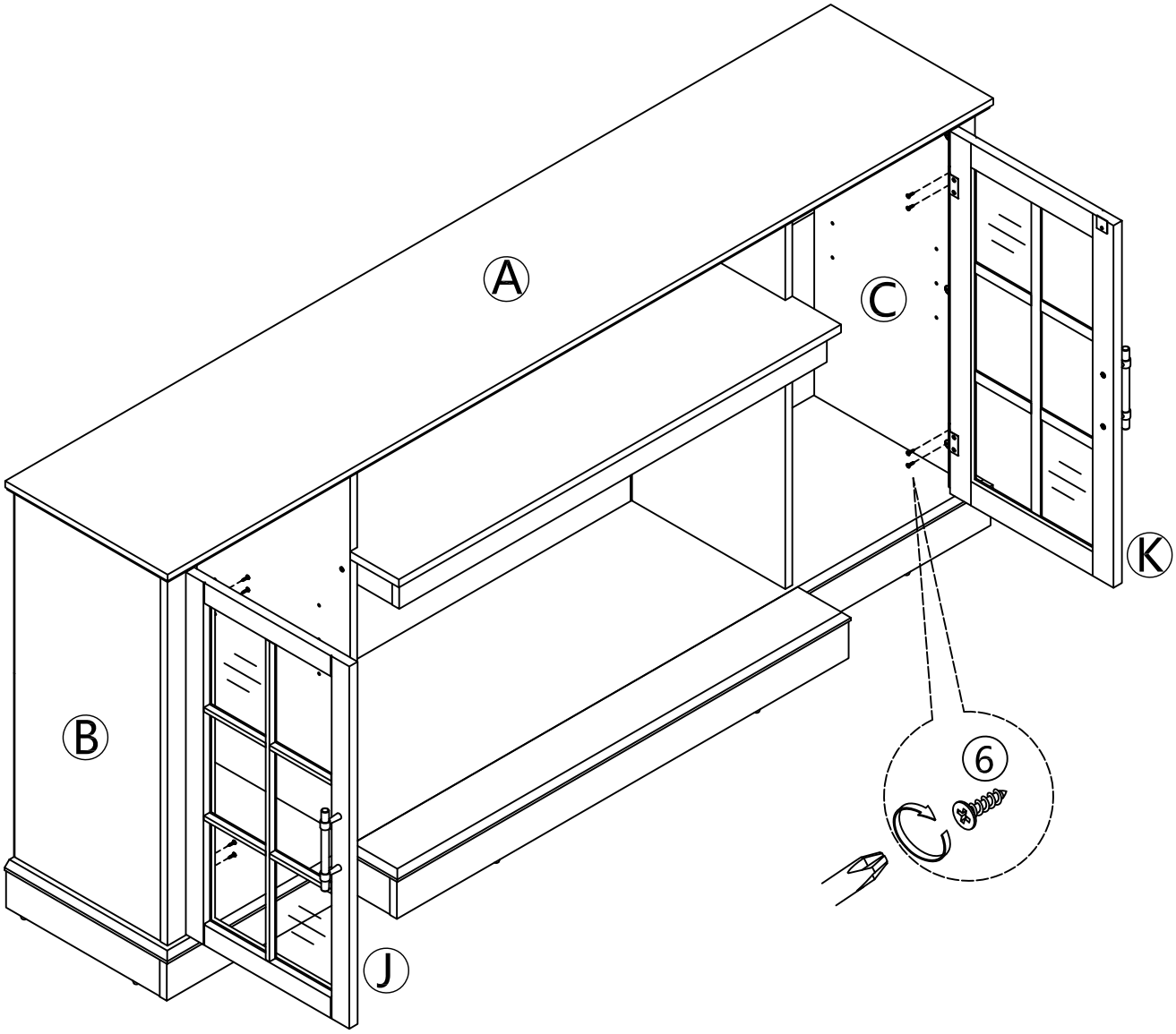

STEP 20

