ROCKPOINT®

USE AND CARE GUIDE
TV STAND WITH SLIDING BARN DOOR

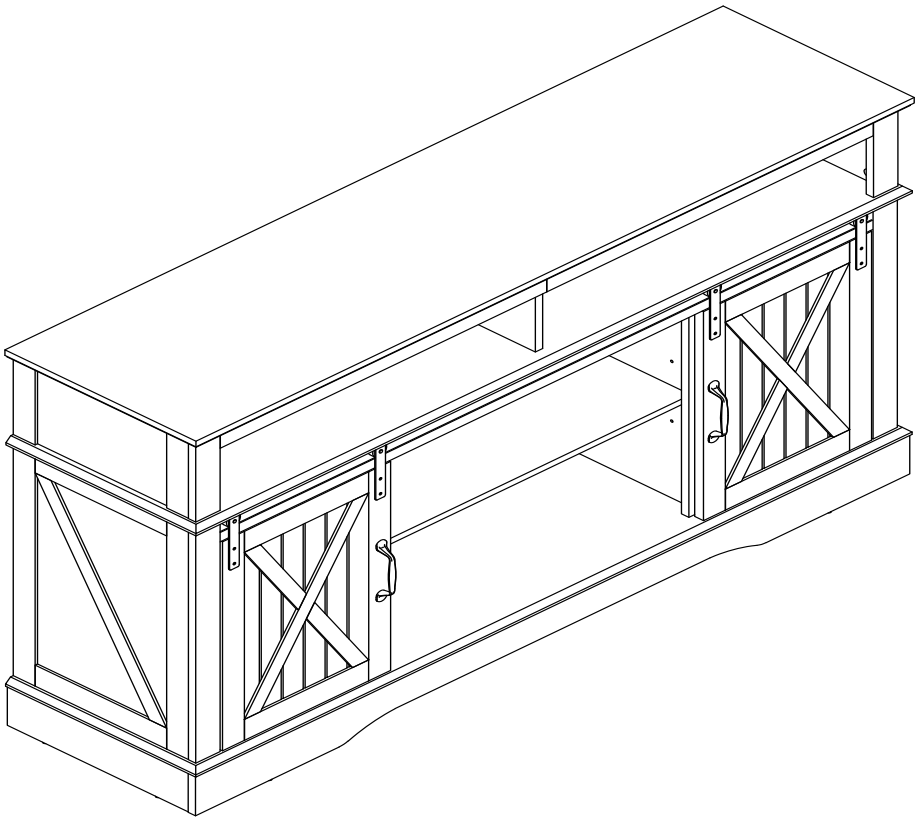

IMPORTANT
Questions,problems,assembly help,missing parts?

We will gladly help and ship your replacement parts free of charge.
If you have any question related to product please free to contact our customer service mail:Rockpointservice@hotmail.com
All the detail Assembly issue pls review the website:www.HiRockpoint.com

---

IMPORTANT

THIS INSTRUCTION CONTAINS IMPORTANT SAFETY INFORMATION.
PLEASE READ AND KEEP FOR FUTURE REFERENCE

WARNING

- Do not allow chlidren to climb on unit
- Serious or fatal crushing injuries can occur from furniture tip-over,To prevent this furniture from tipping over it must be permanently fixed to the wall.
- Fixing devices for the wall are not included since different wall materials require different types of fixing devices. Use fixing devices suitable for the walls in your home.For advice on suitable fixing systems,contact your local specialized dealer
- This unit contains small parts which can be swallowed by children and pets. Keep children and pets away during assembly. To avoid danger of suffocation, always keep plastic bags away from children and pets.

BEFORE YOU START

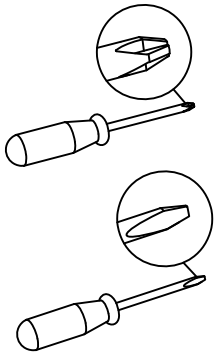

- Separate and count all parts and hardware.
- Have the following tools: Flat head Screwdriver,#2 Philips Head Screwdriver.
- If using a power tools,please be ware to slow down and stop when screw is tight.Failure to do so may result in stripping the screw.
- Requires two people for assembly.

CAM LOCK FASTENING SYSTEM

1

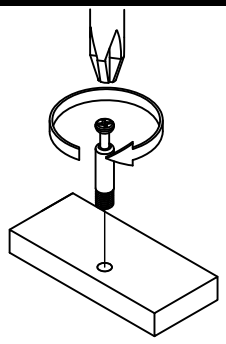

2

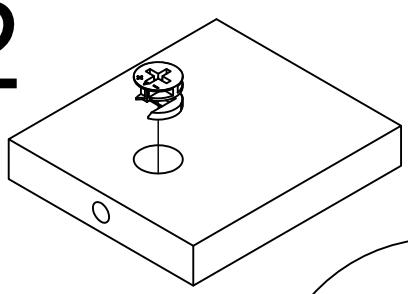

3

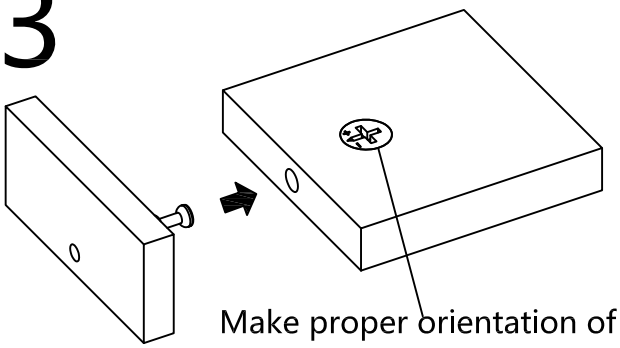

Make proper orientation of
CAM LOCK when inserting CAM PIN

4

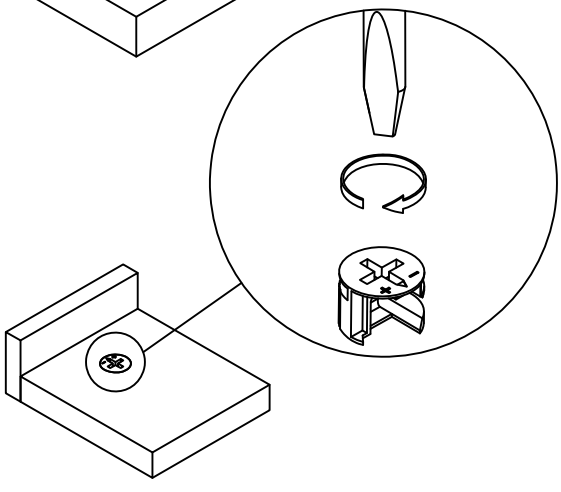

PARTS

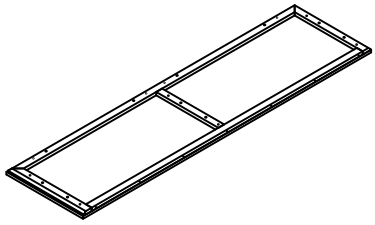

Ⓐ X1

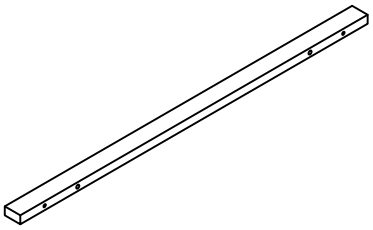

Ⓑ X2

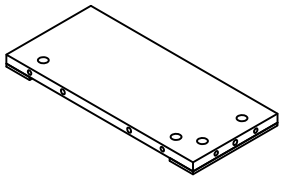

Ⓒ X1

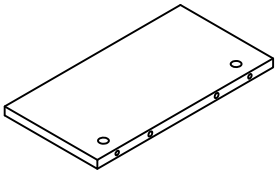

Ⓓ X1

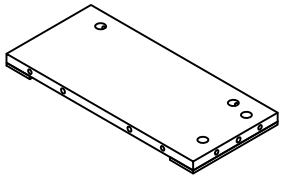

Ⓔ X1

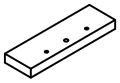

Ⓕ X2

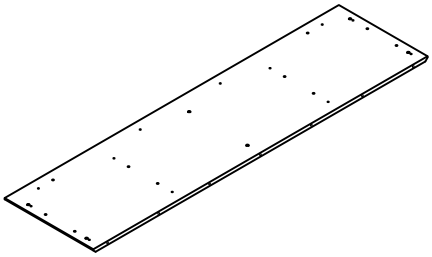

Ⓖ X1

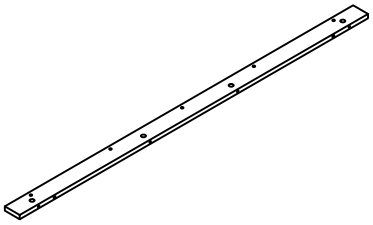

Ⓗ X1

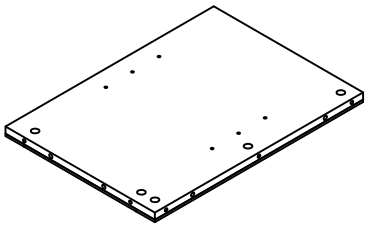

Ⓘ X1

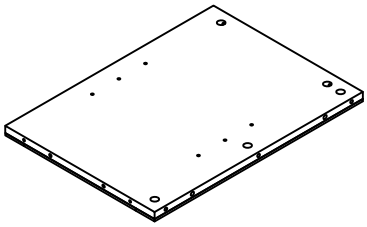

Ⓙ X1

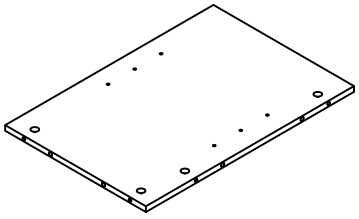

Ⓚ X1

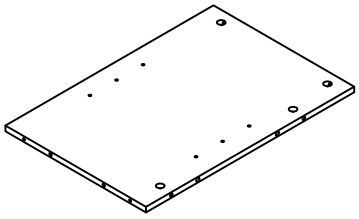

Ⓛ X1

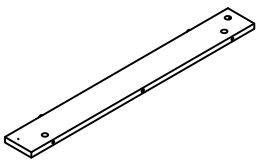

Ⓜ X1

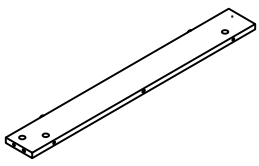

Ⓝ X1

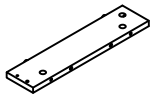

Ⓞ X1

PARTS

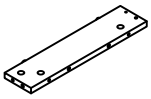

Ⓟ X1

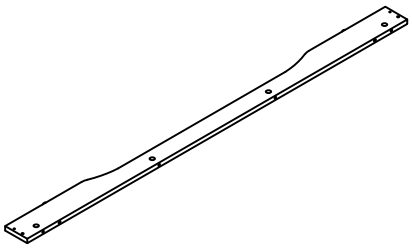

Ⓠ X1

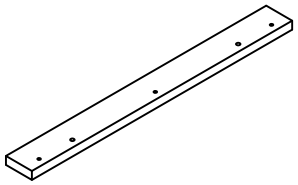

Ⓡ X2

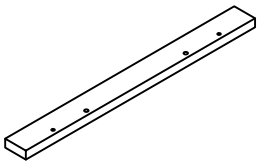

Ⓢ X2

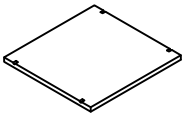

Ⓣ X2

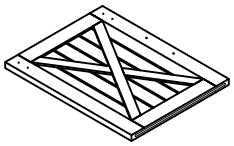

Ⓤ X1

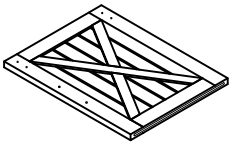

Ⓥ X1

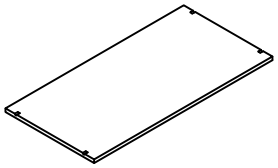

Ⓦ X1

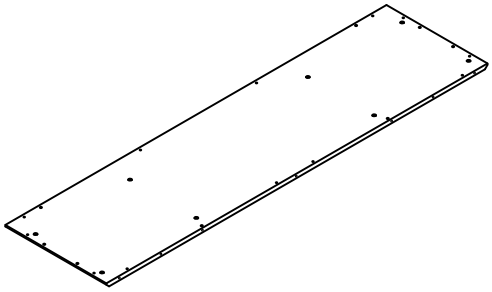

Ⓧ X1

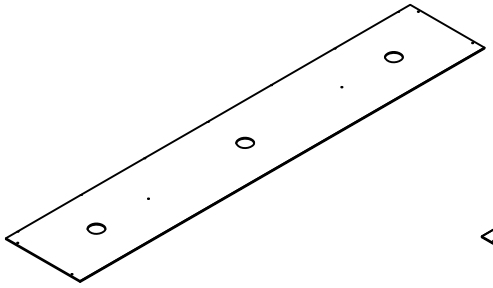

Ⓨ X1

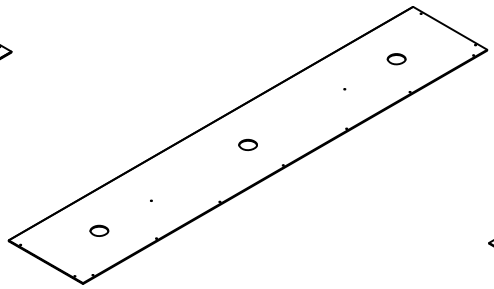

Ⓩ X1

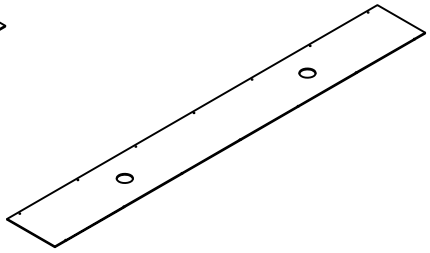

Ⓐ X1

Part List

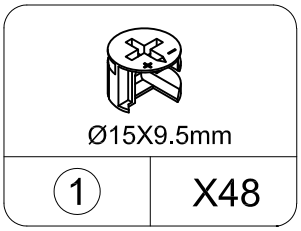

CAM LOCK
spare:3

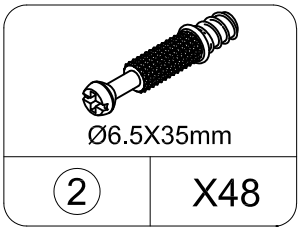

CAM BOLT
spare:3

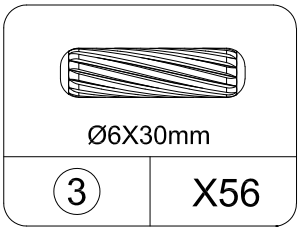

WOODEN DOWEL
spare:3

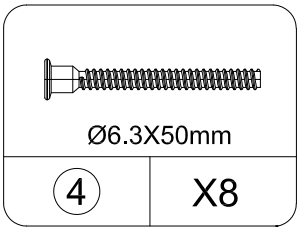

SCREW
spare:1

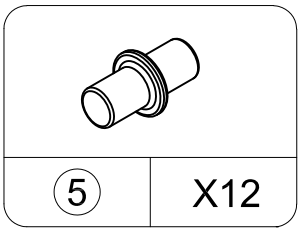

SHELF SUPPORT
spare:1

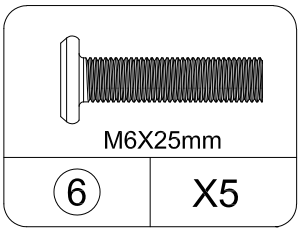

BOLT
spare:1

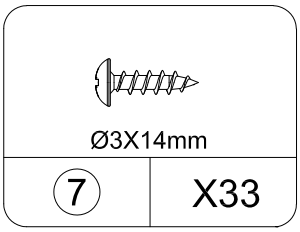

SCREW
spare:3

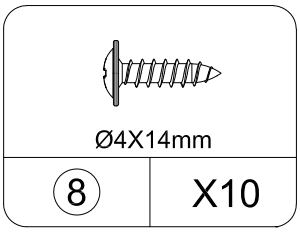

SCREW
spare:2

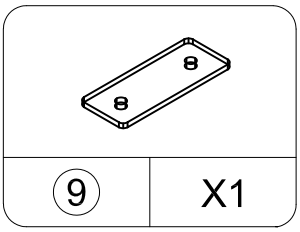

METAL PLANT

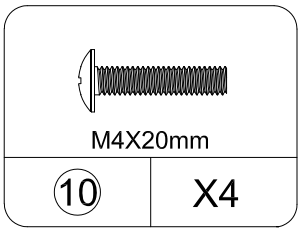

BOLT
spare:1

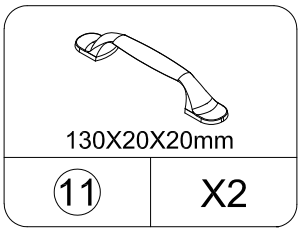

HANDLE

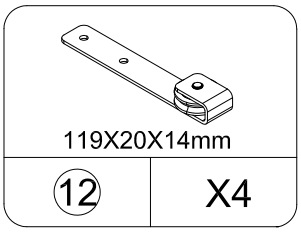

METAL SLIDE

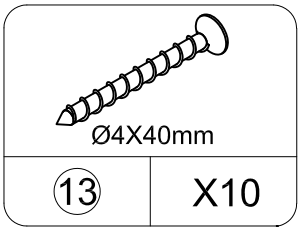

SCREW
spare:1

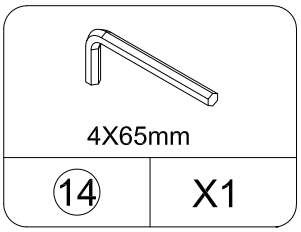

HEX KEY

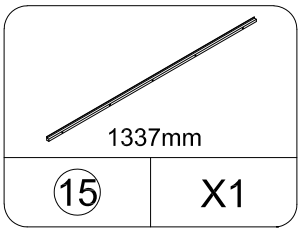

SLIDING RAIL

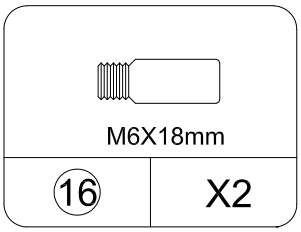

SLIDING DOOR

EXPLOSION DIAGRAM

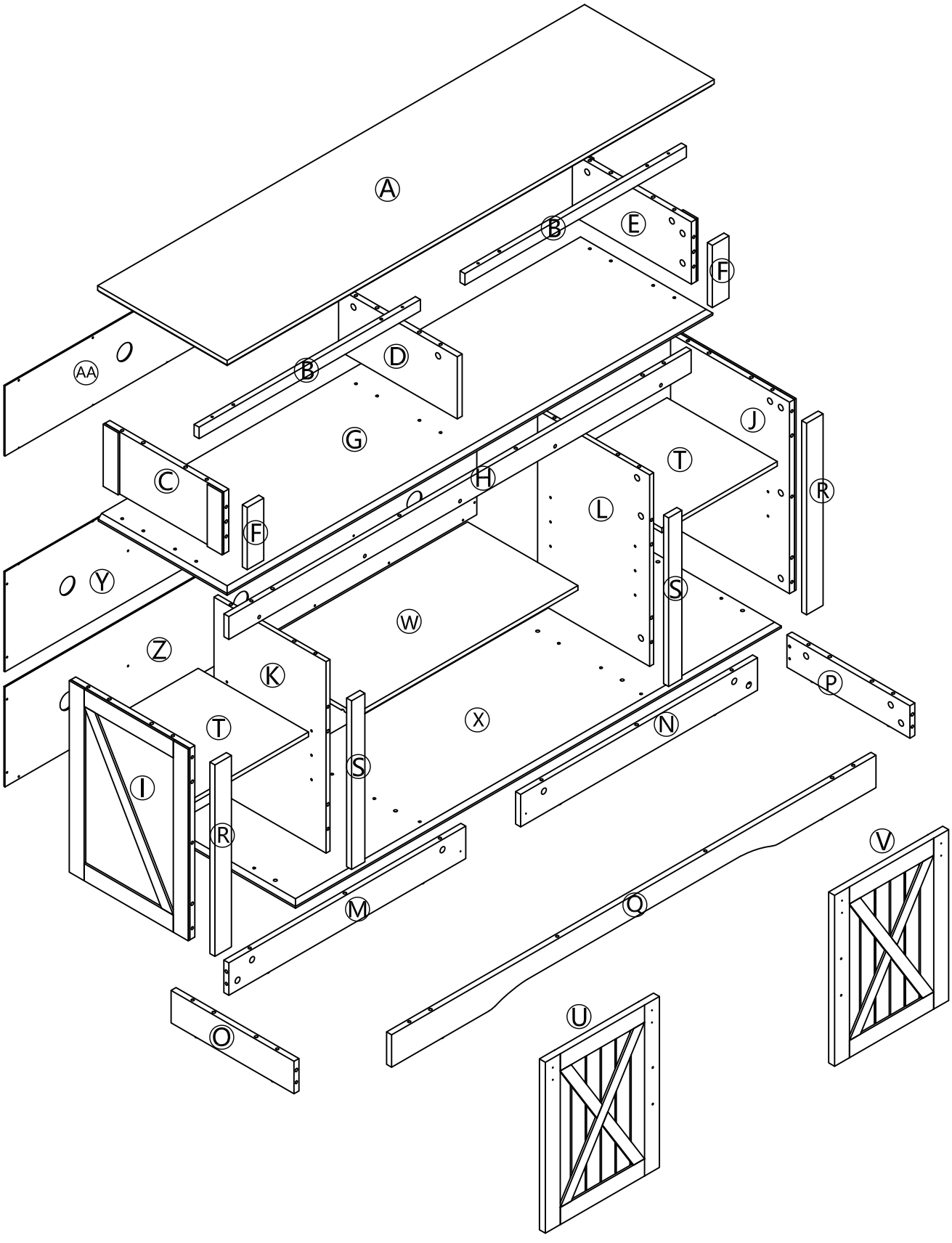

STEP 1

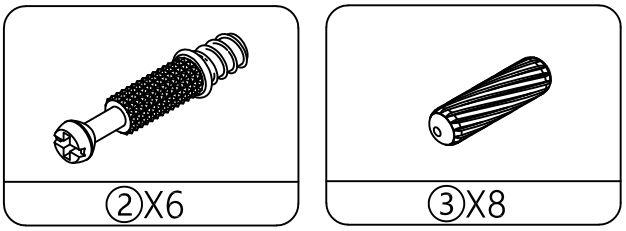

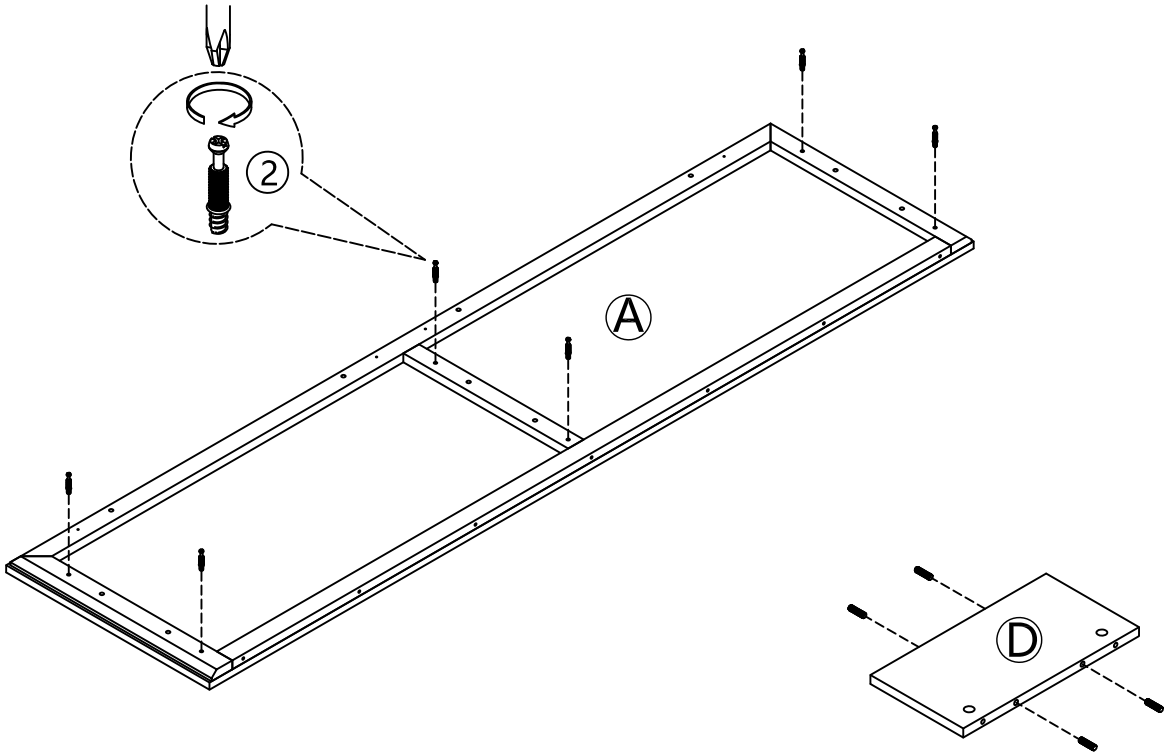

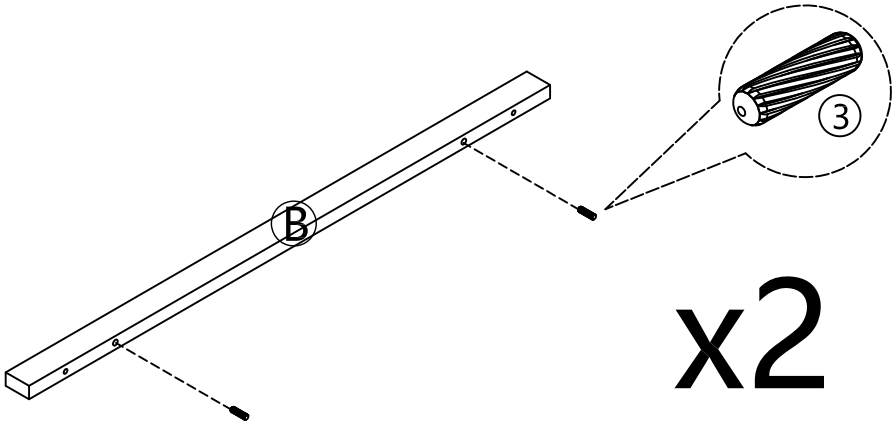

STEP 2

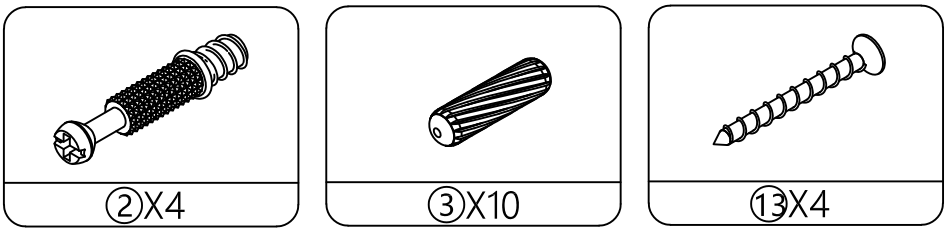

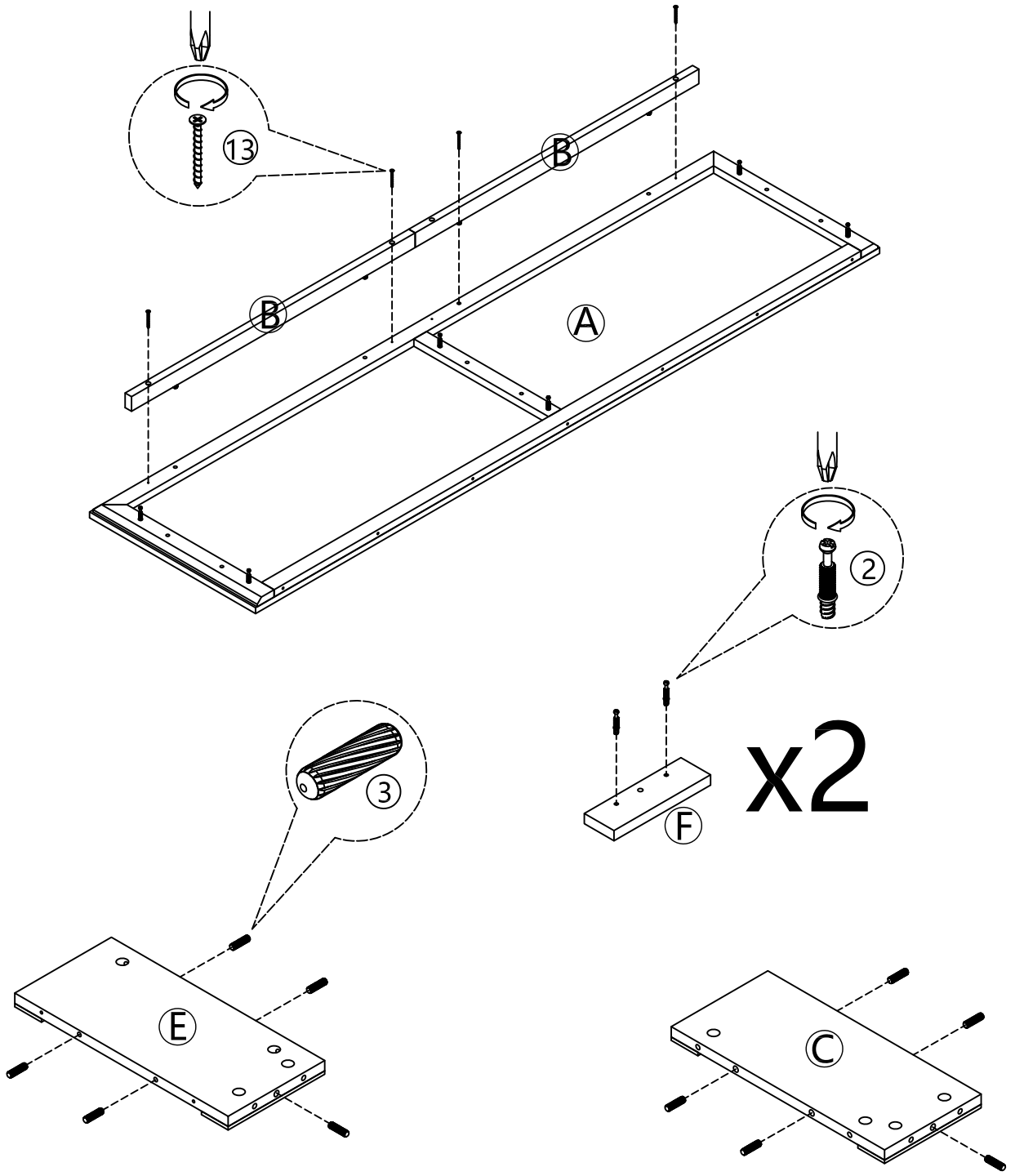

STEP 3

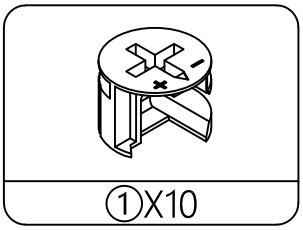

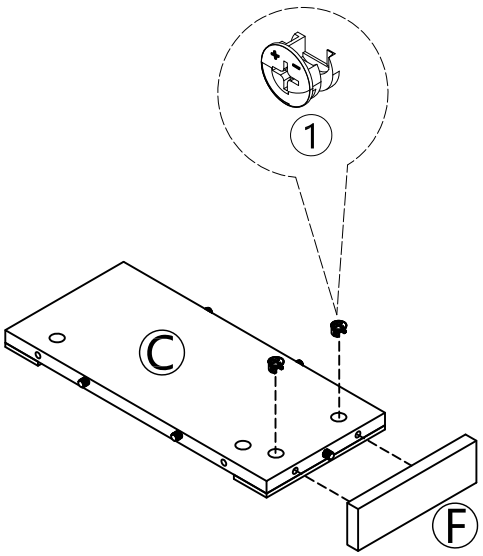

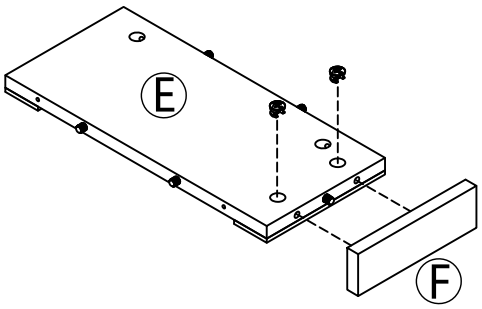

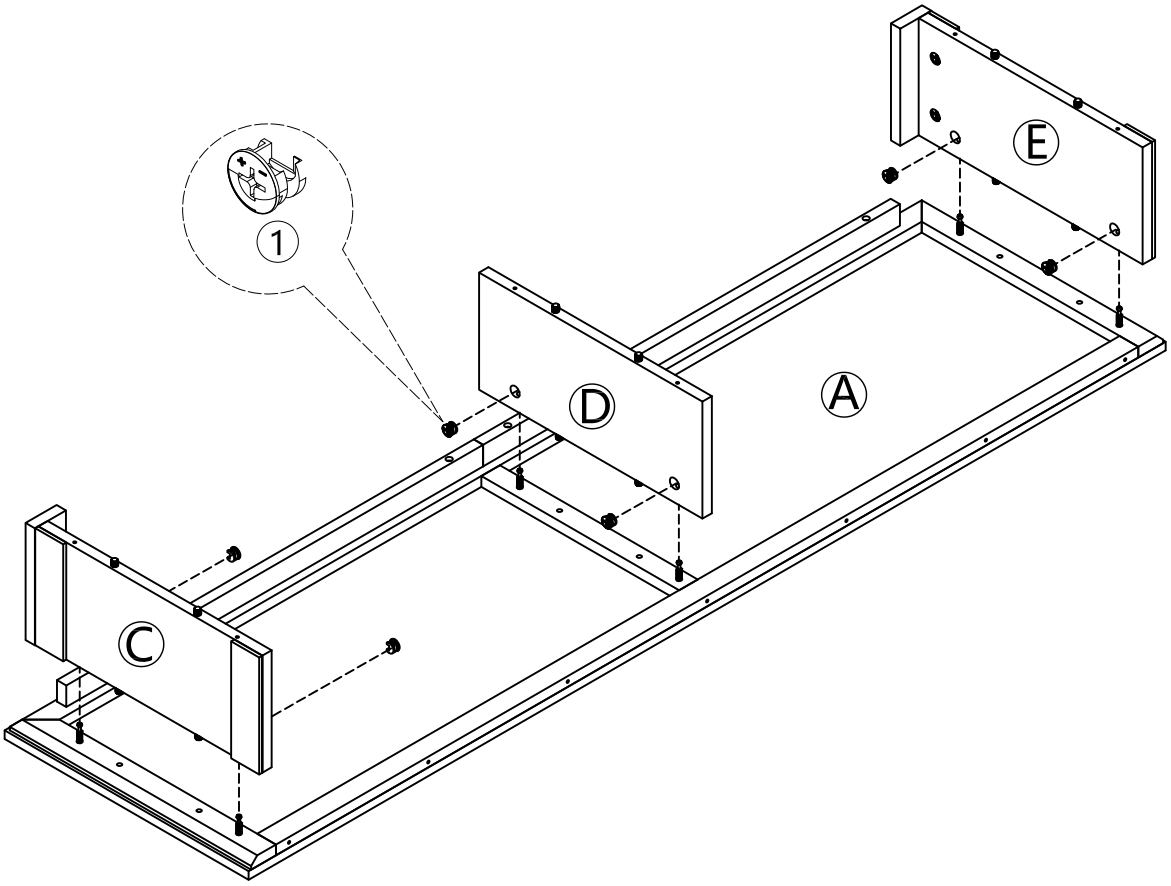

STEP 4

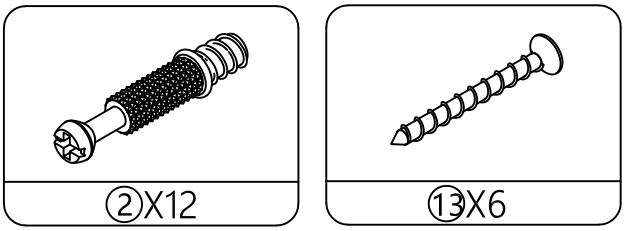

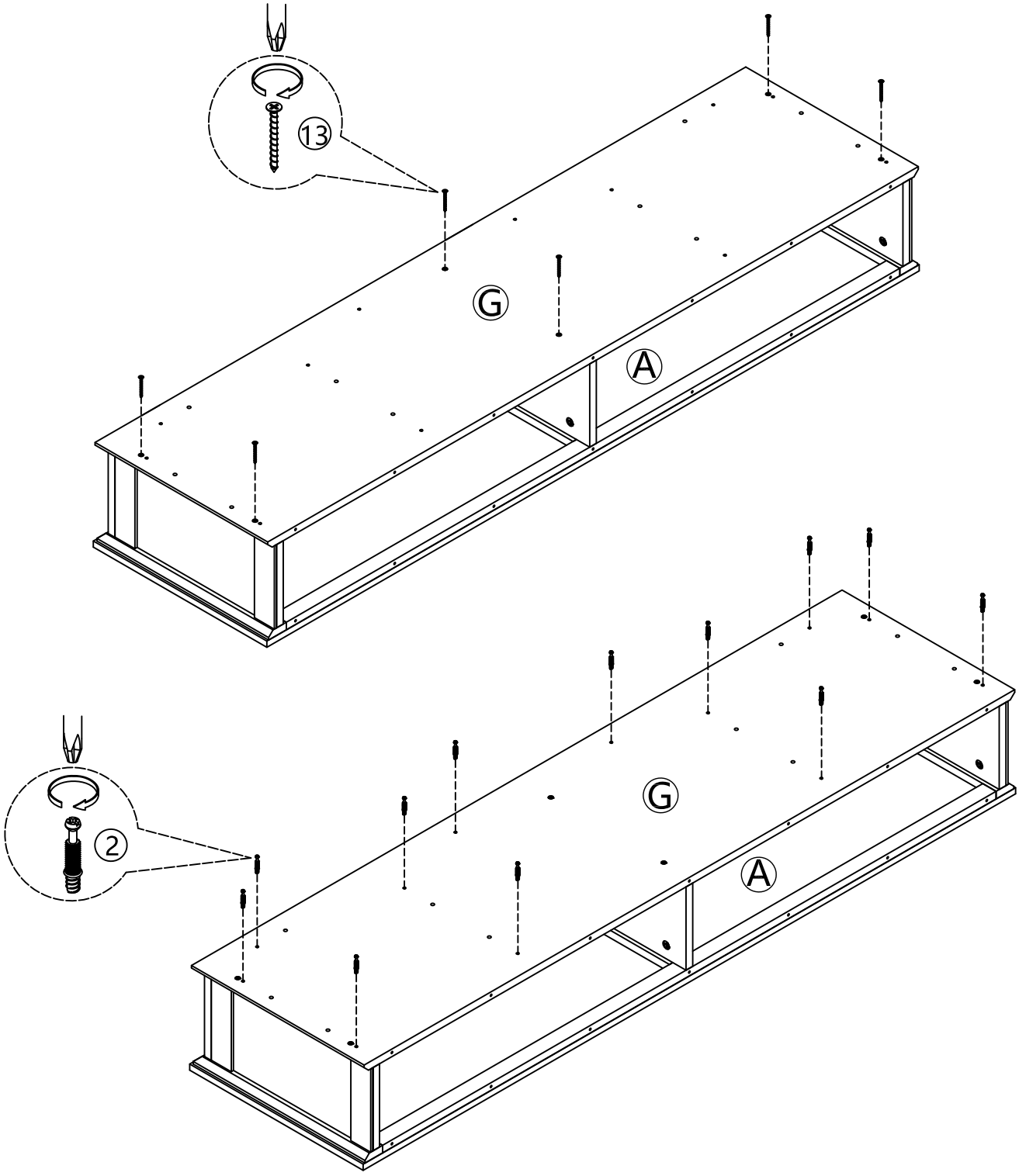

STEP 5

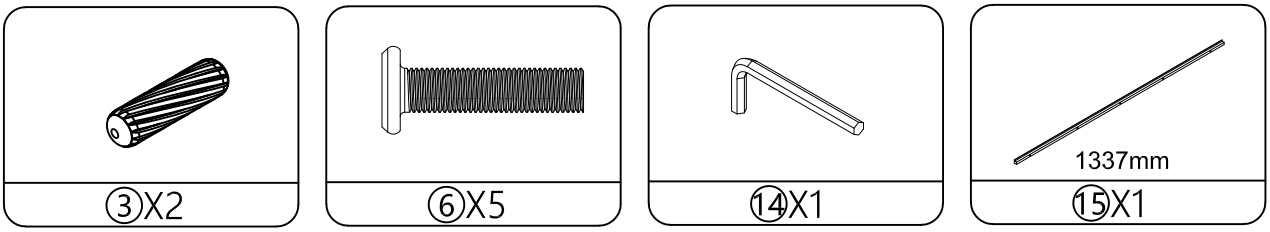

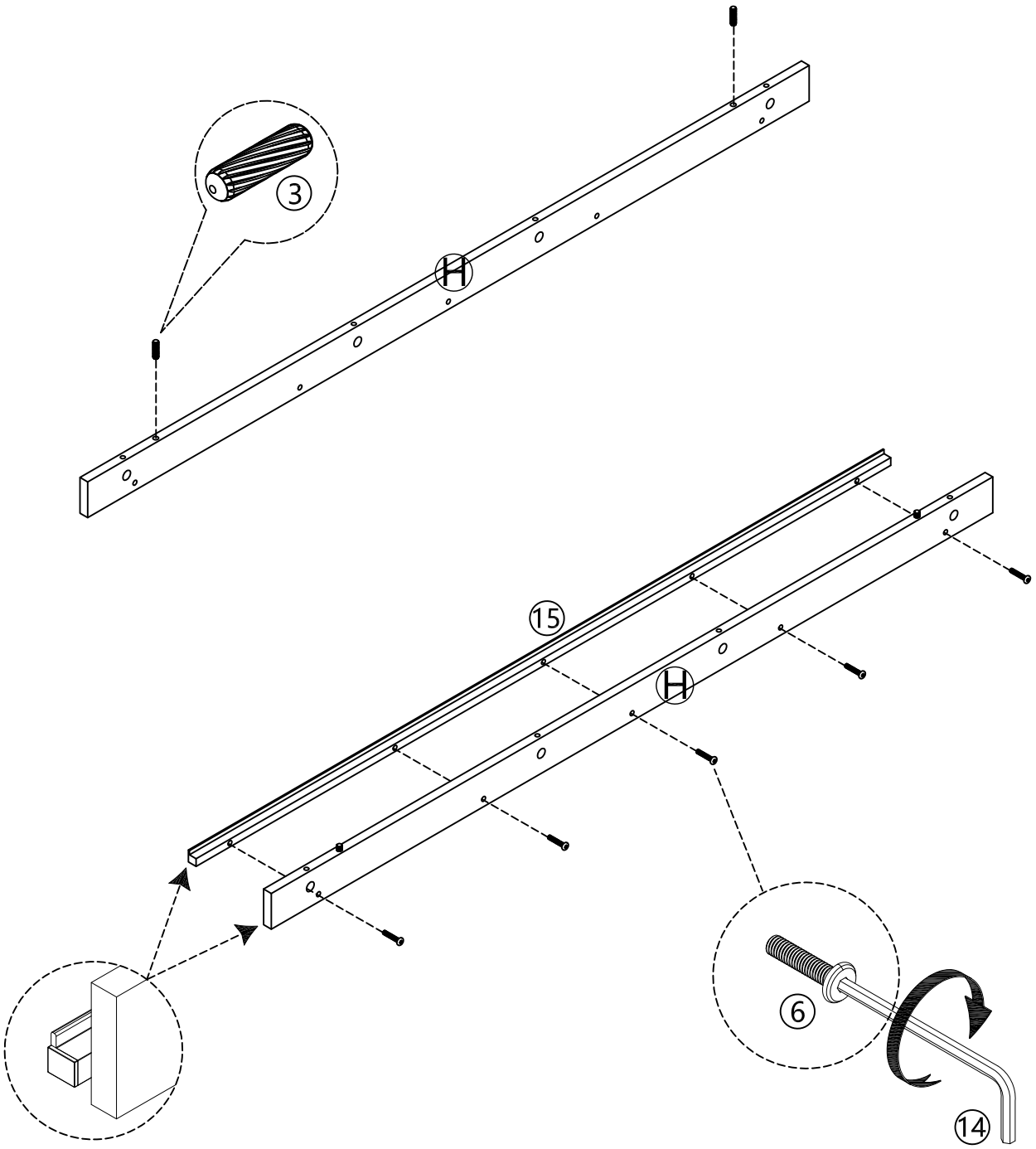

STEP 6

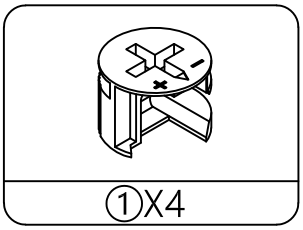

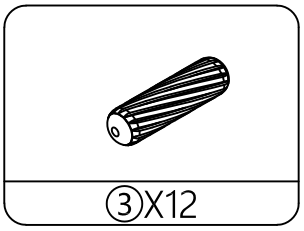

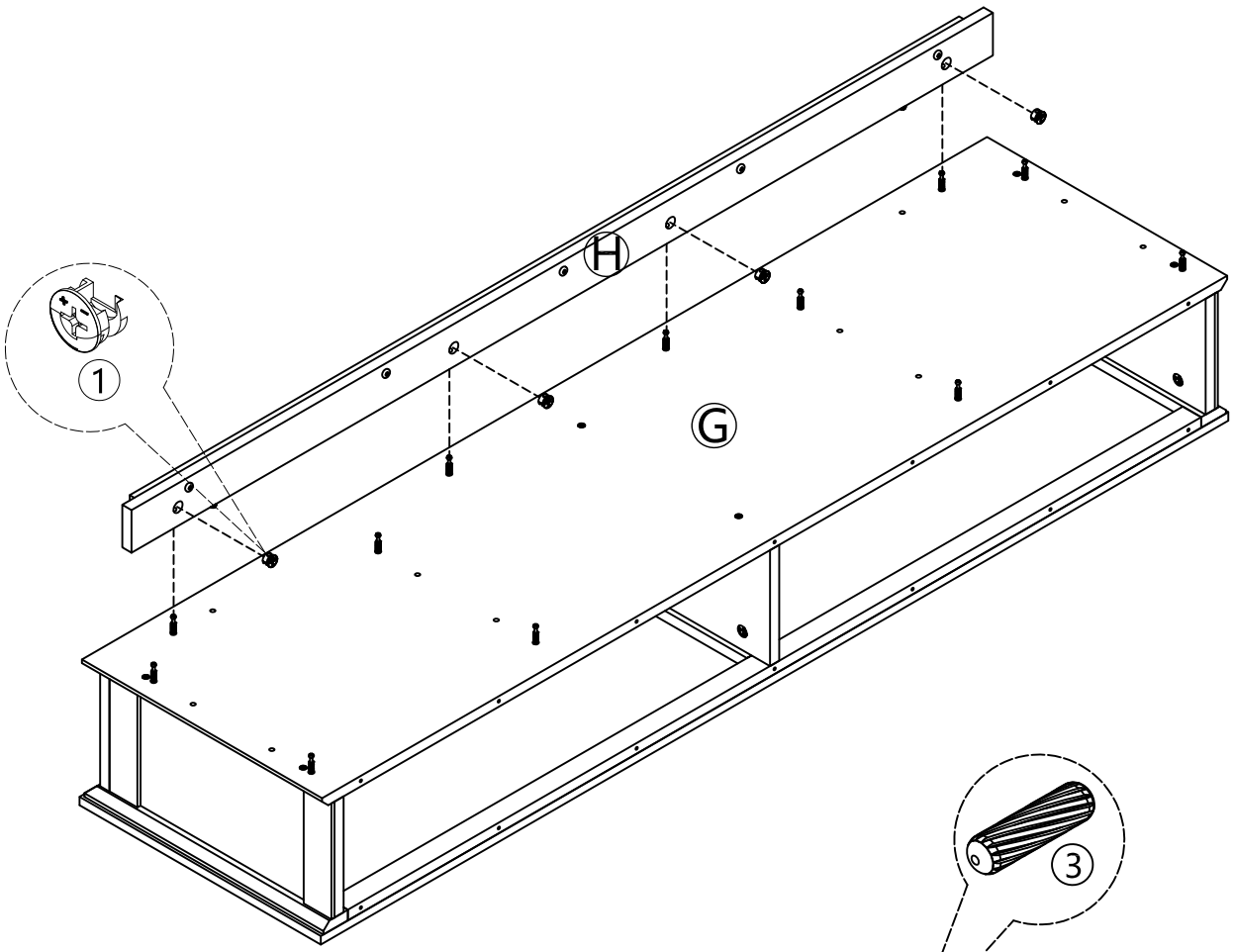

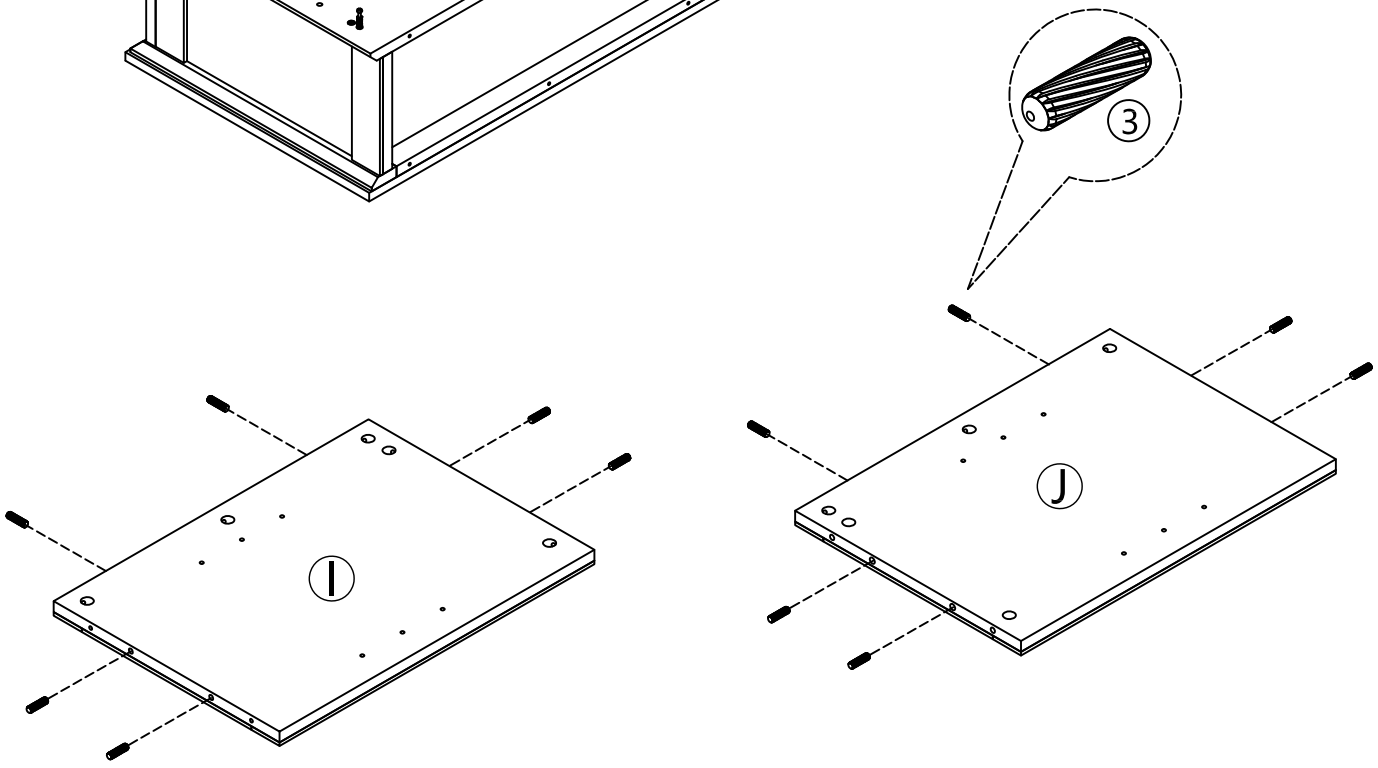

STEP 7

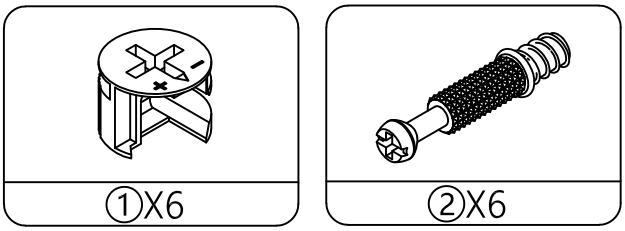

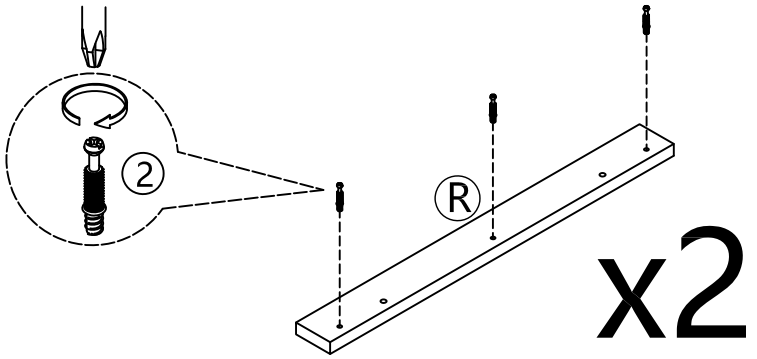

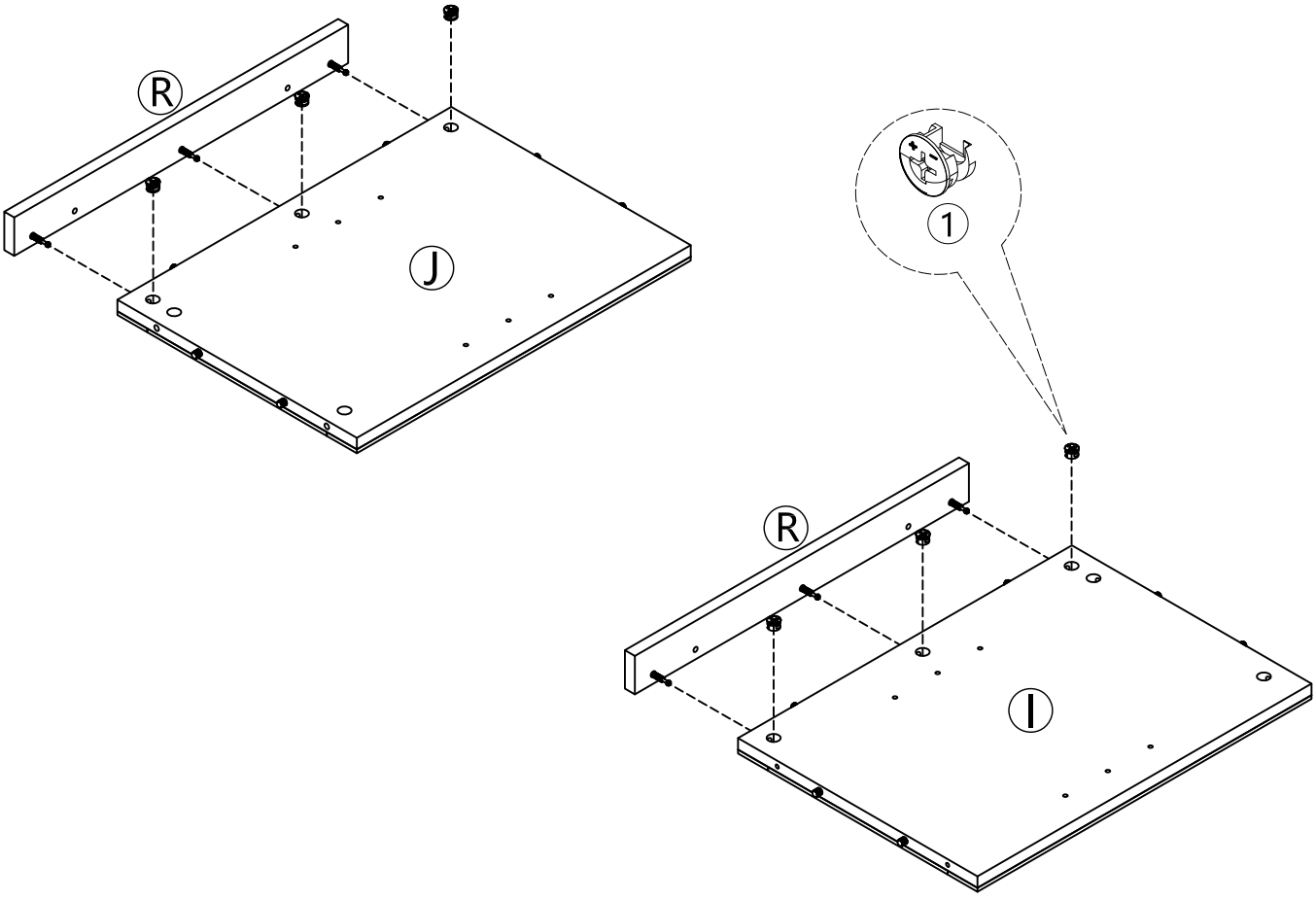

STEP 8

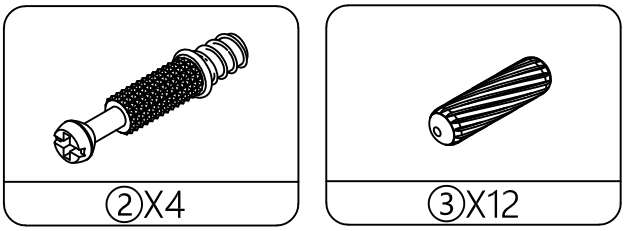

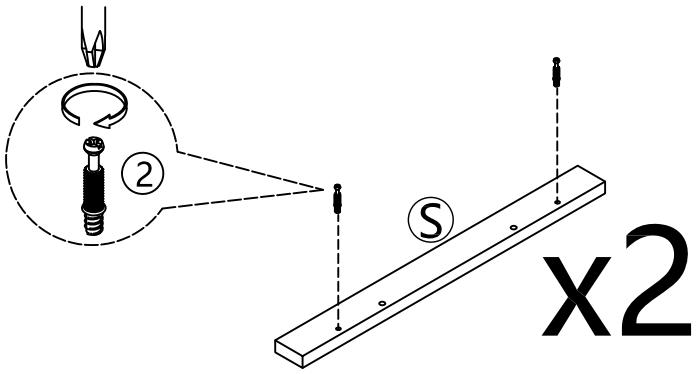

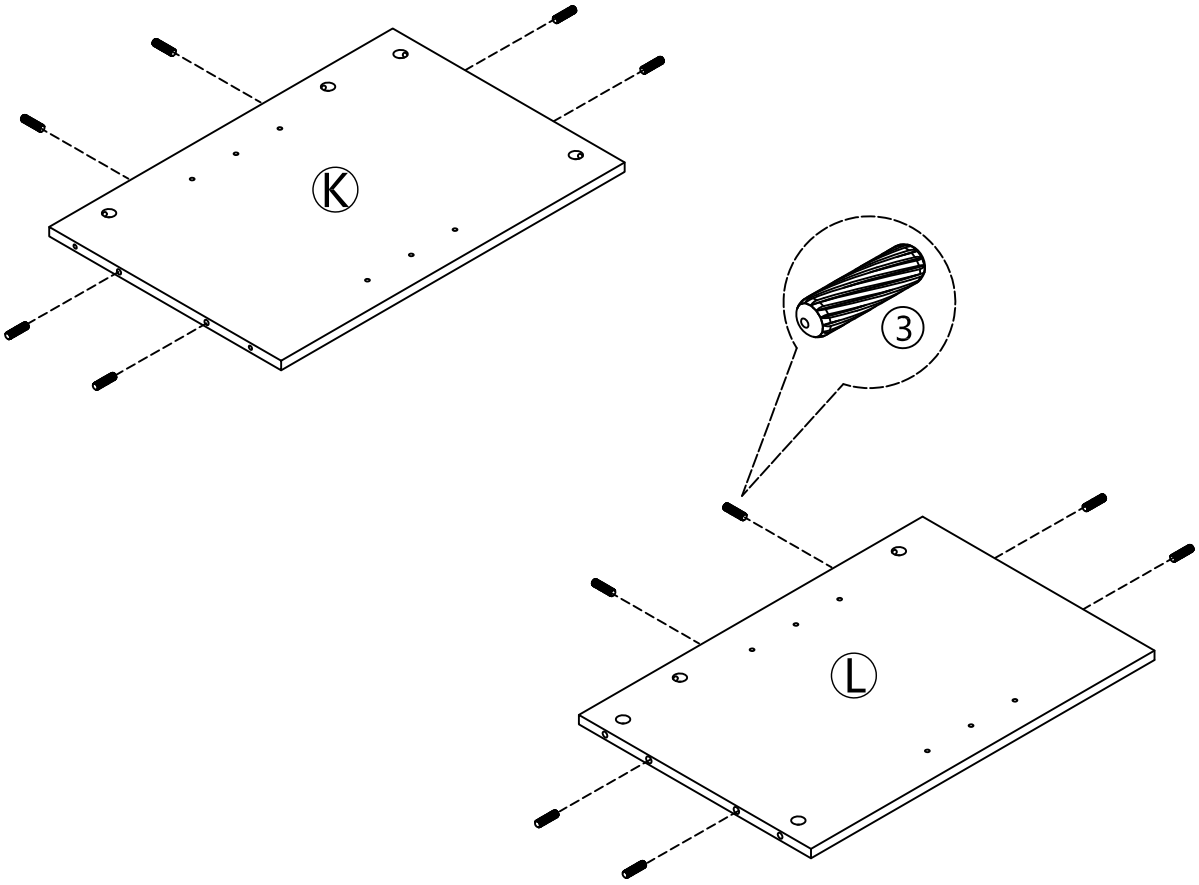

STEP 9

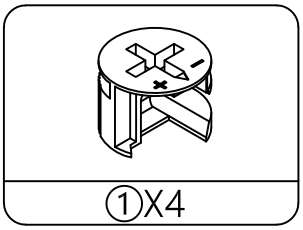

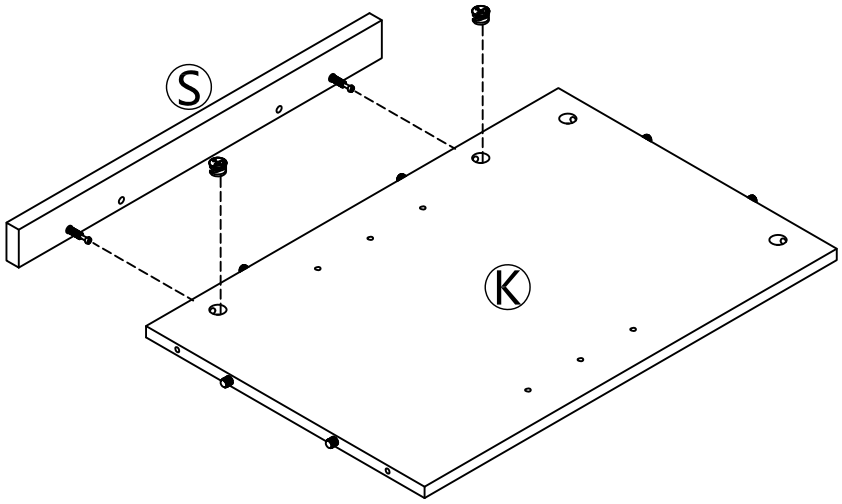

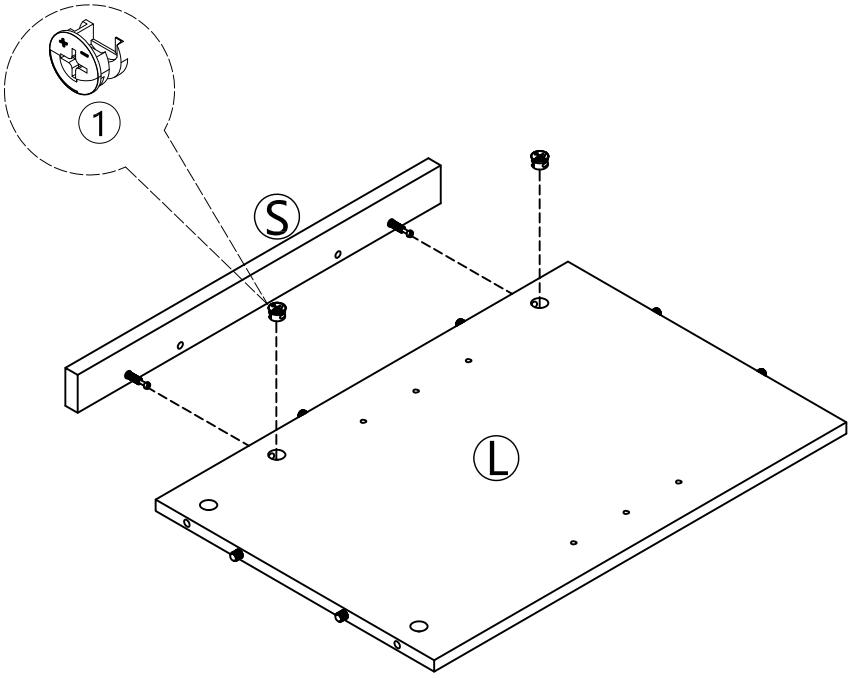

STEP 10

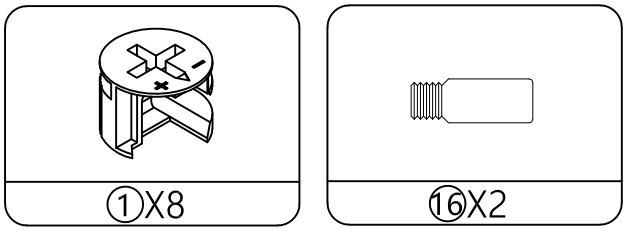

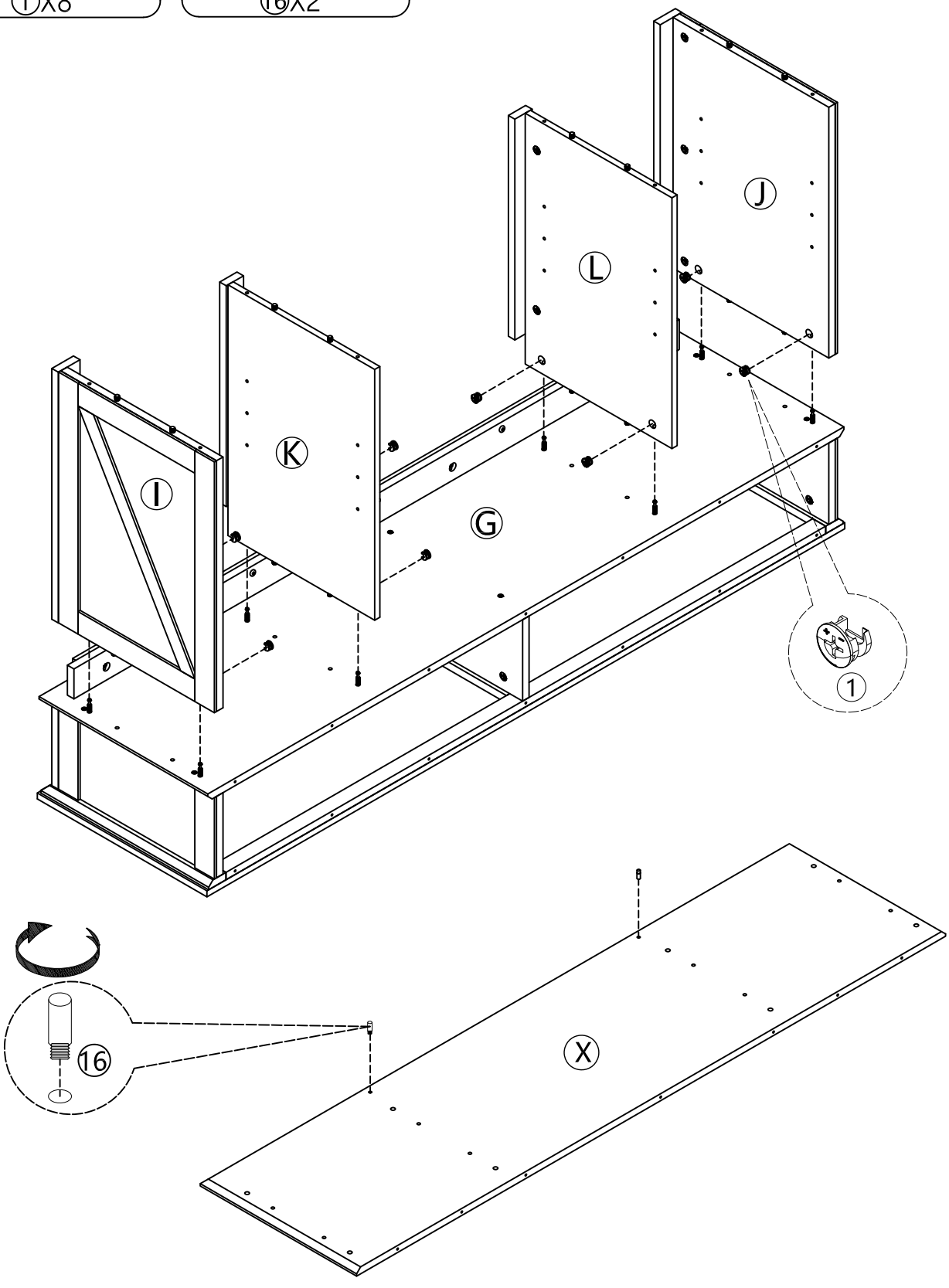

STEP 11

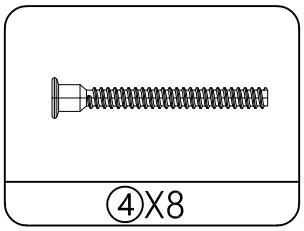

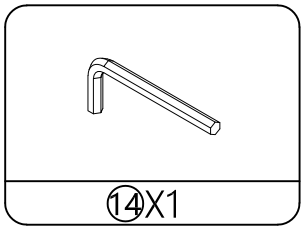

THIS STEP REQUIRES 2 PEOPLE

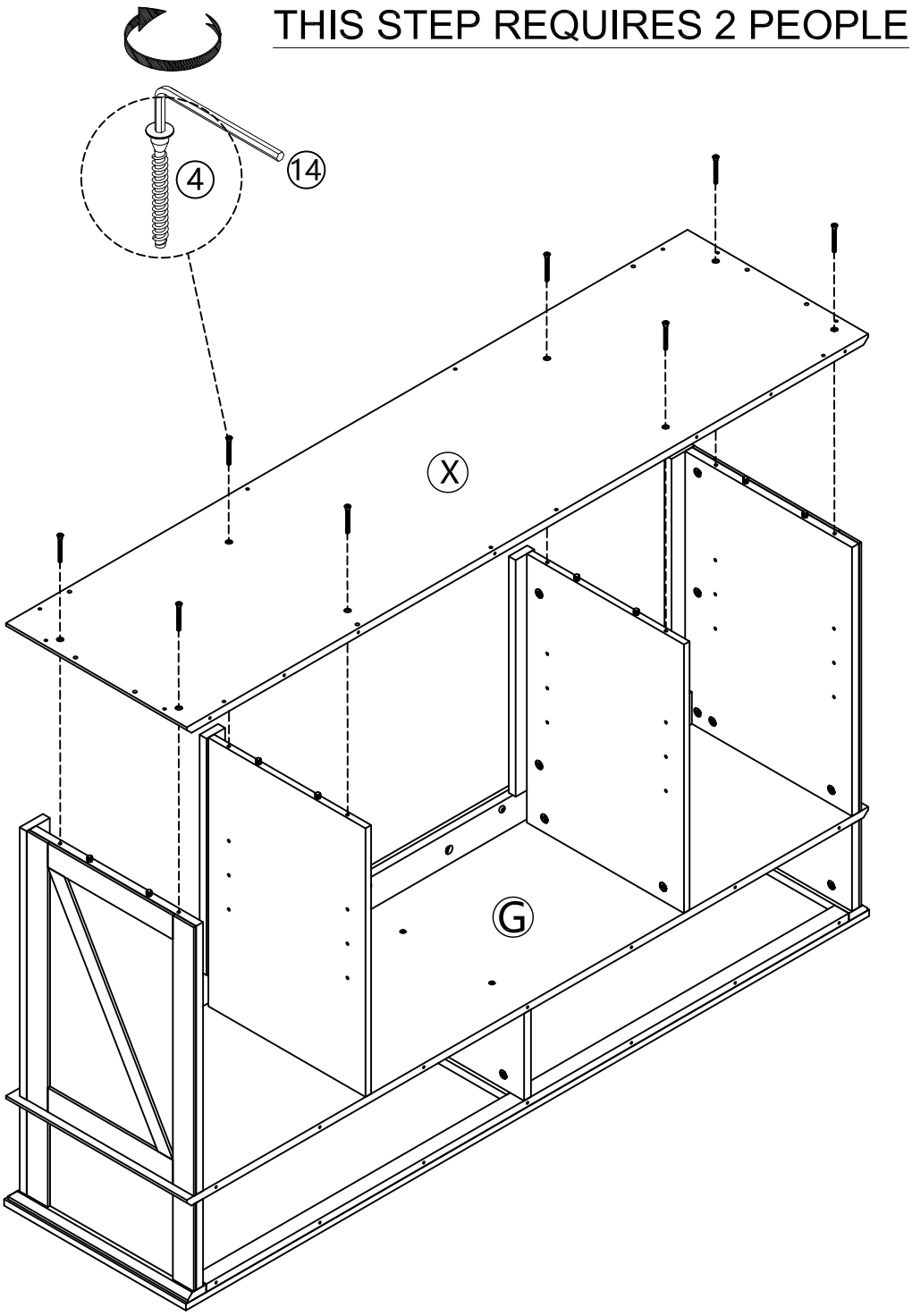

STEP 12

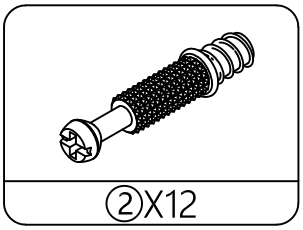

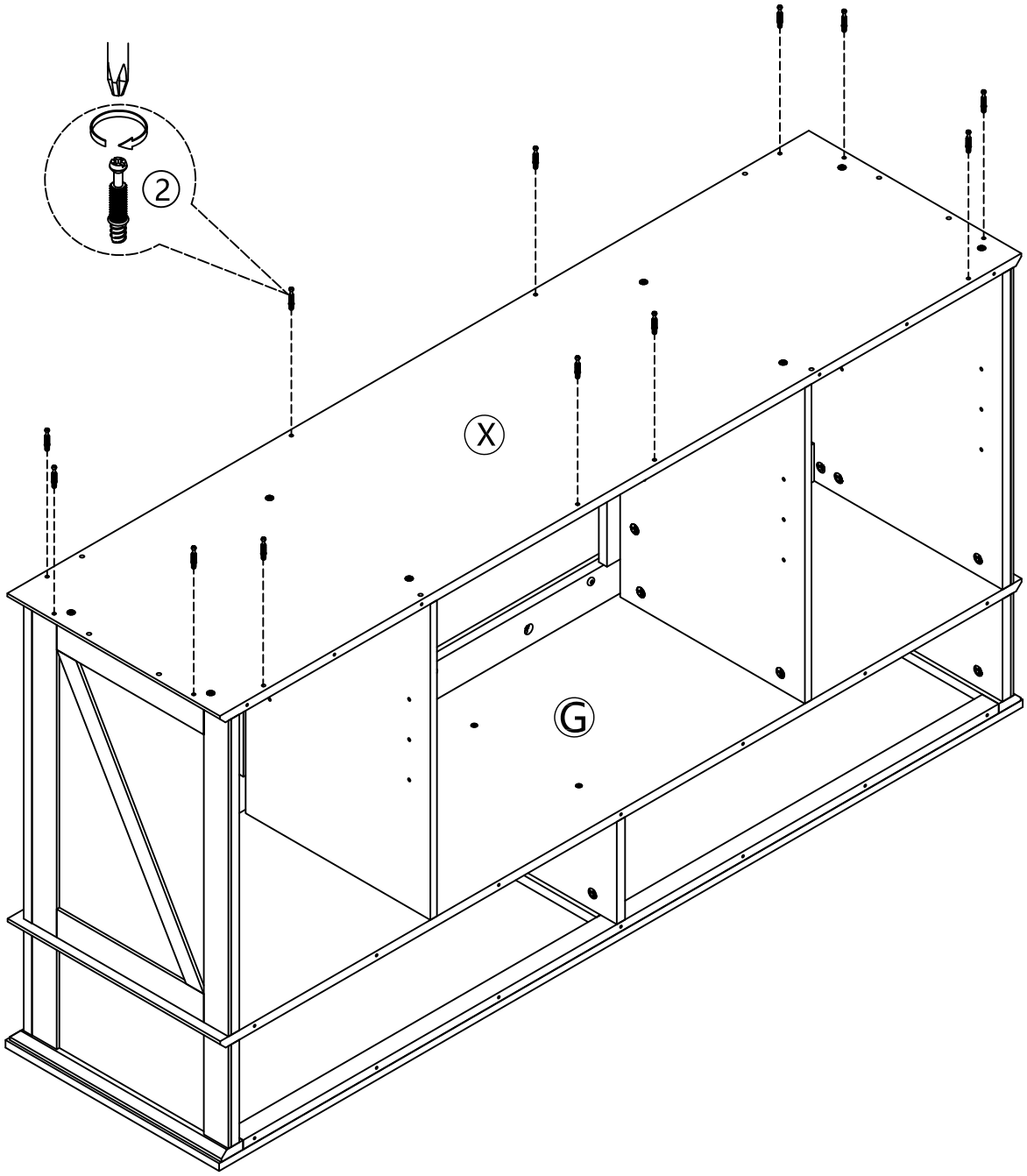

STEP 13

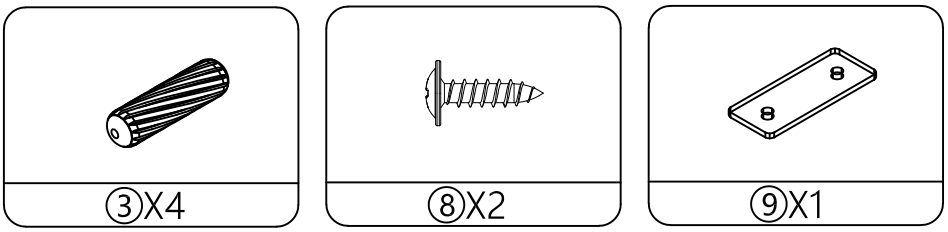

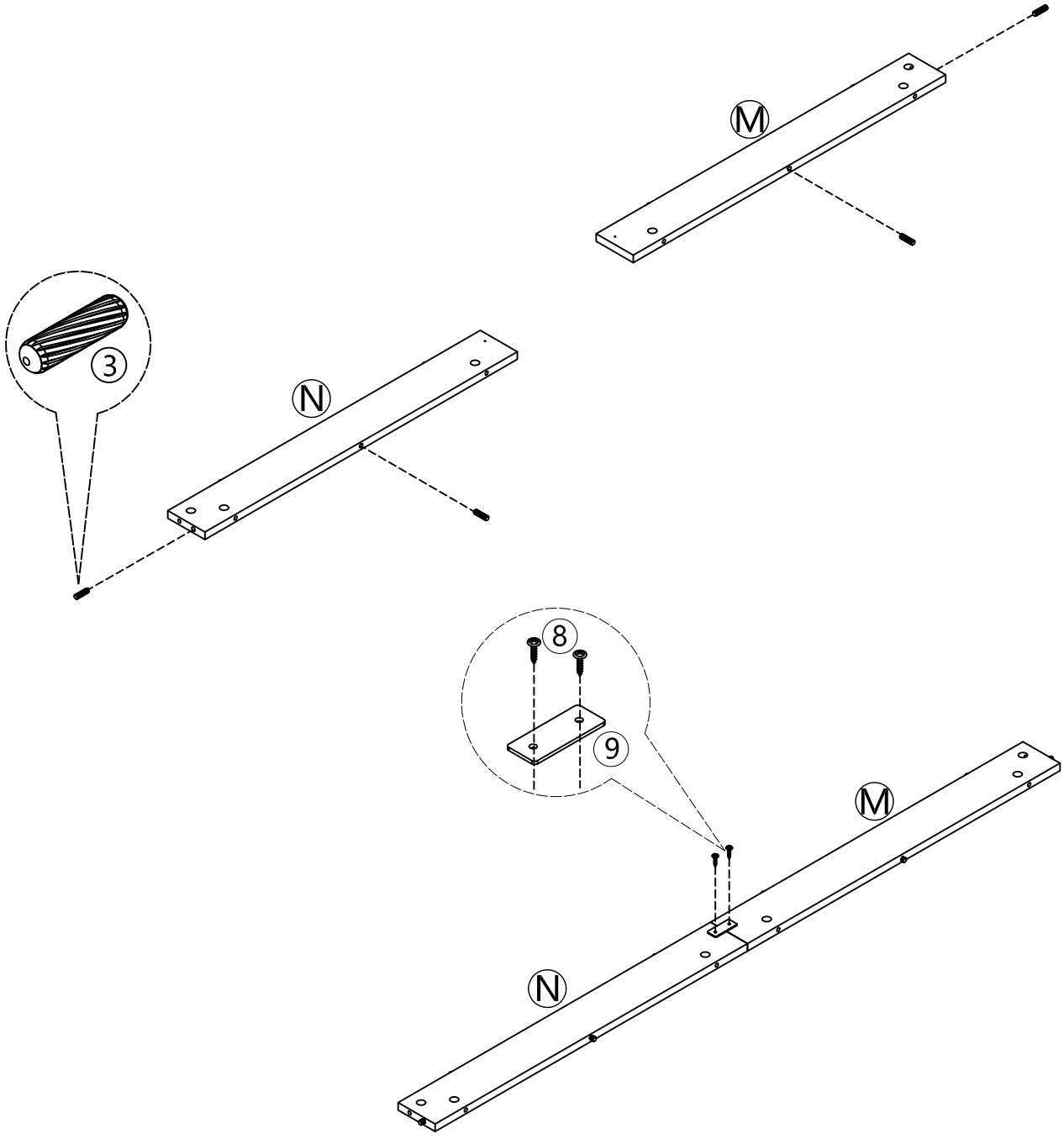

STEP 14

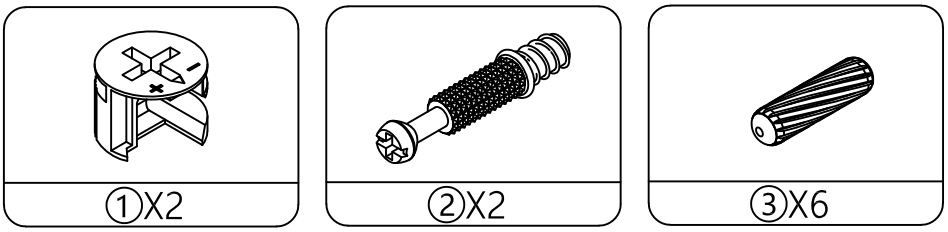

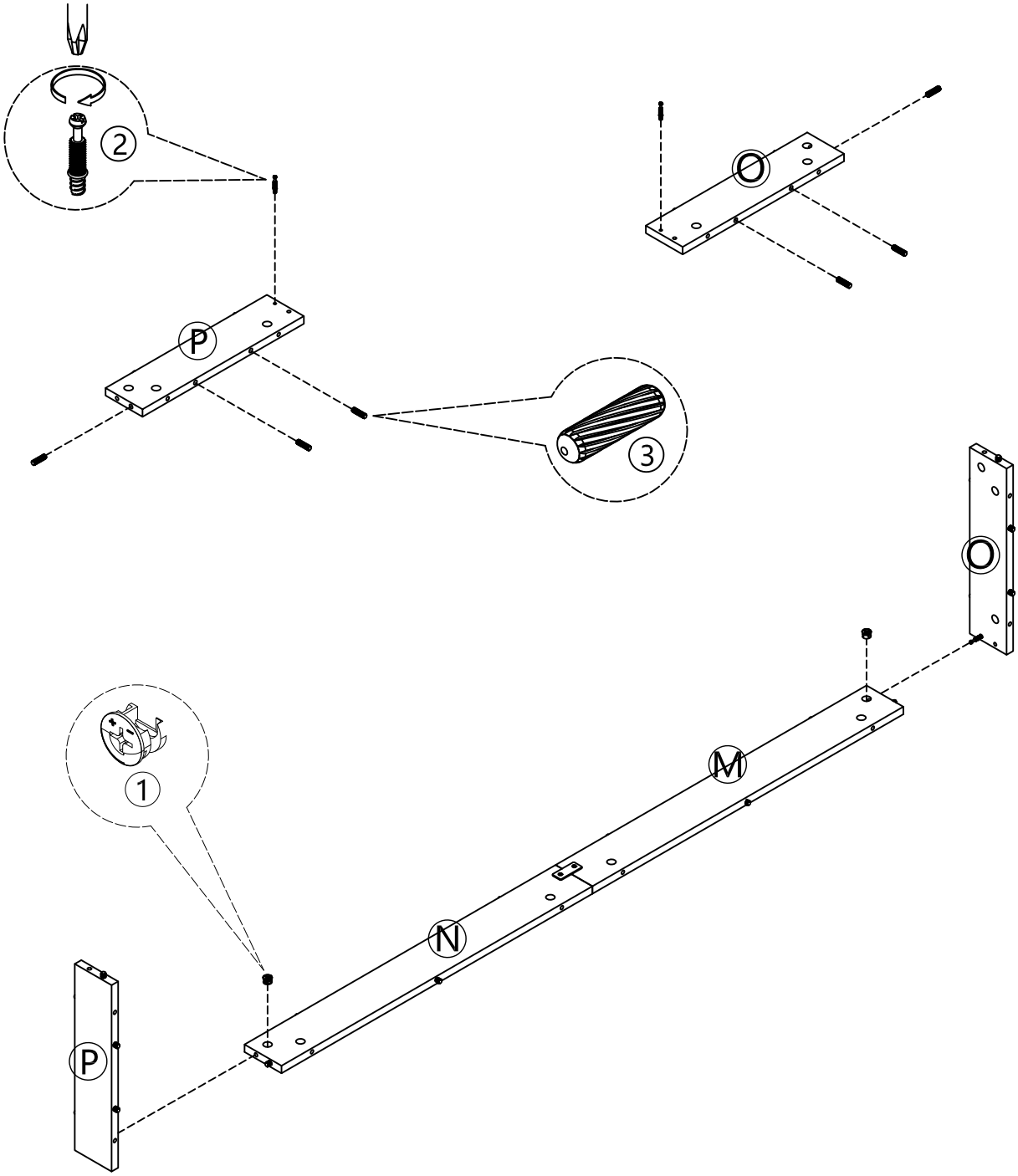

STEP 15

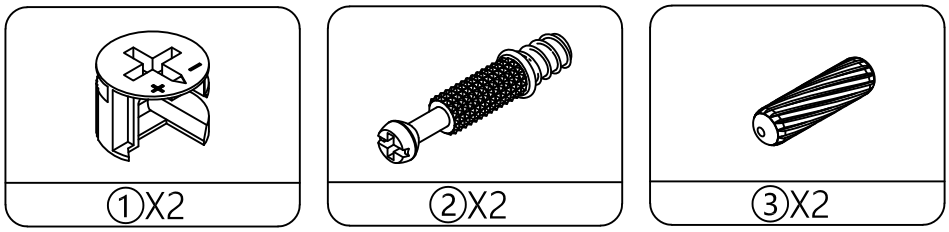

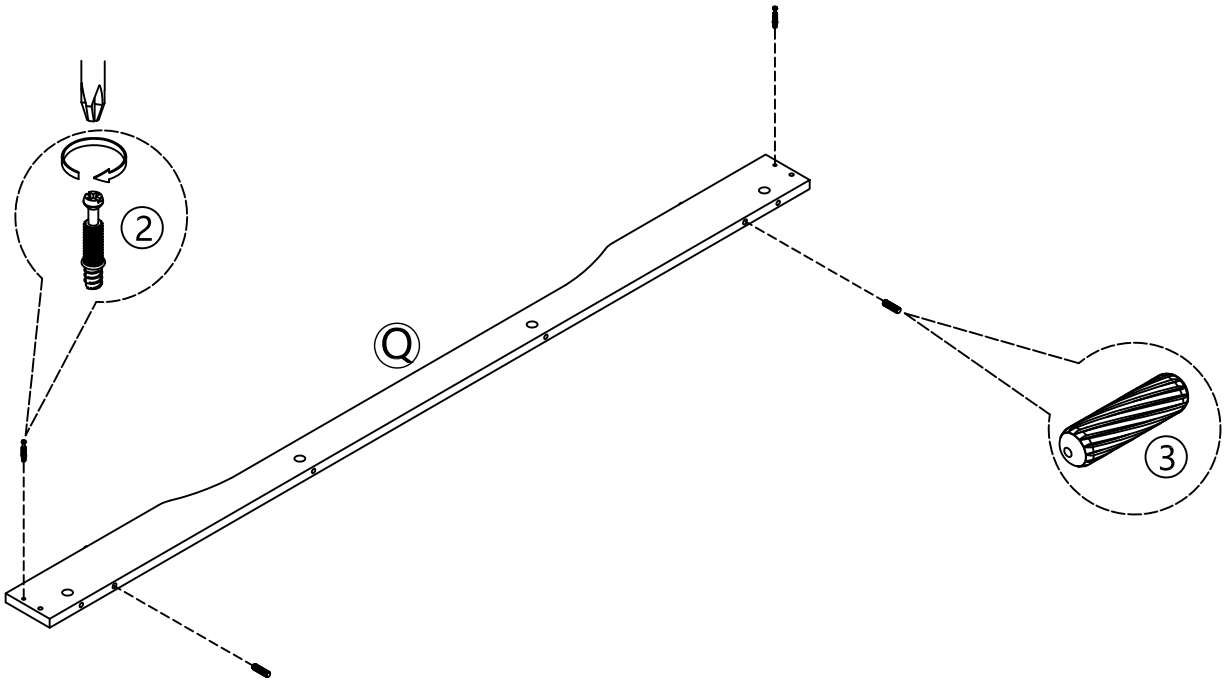

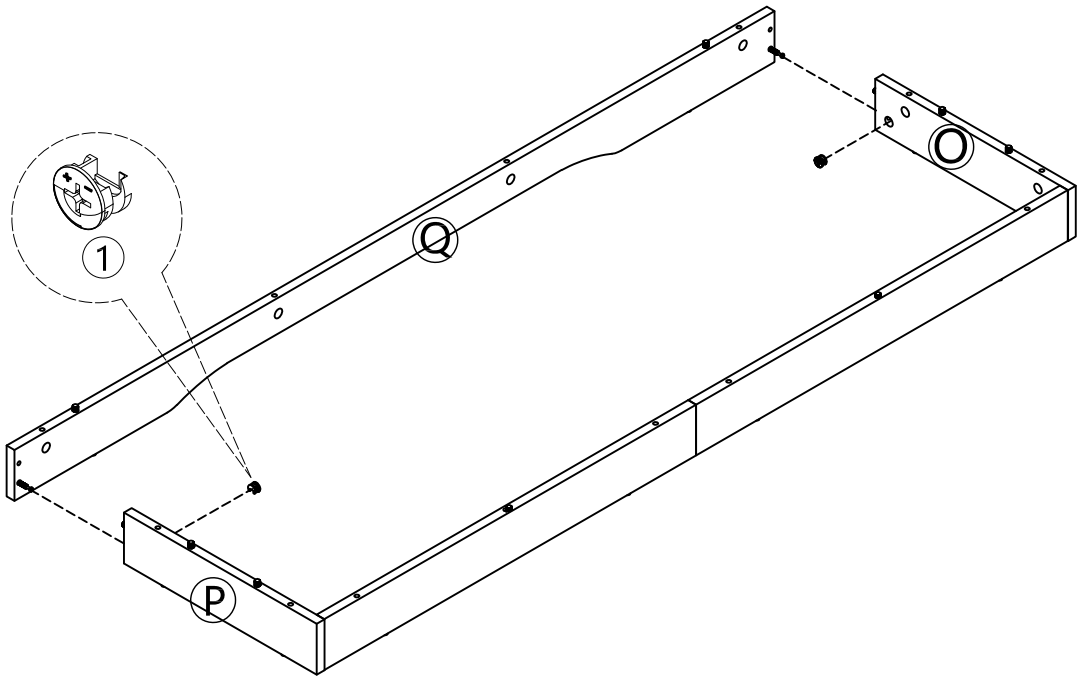

STEP 16

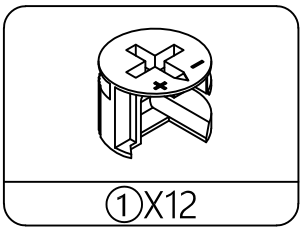

THIS STEP REQUIRES 2 PEOPLE

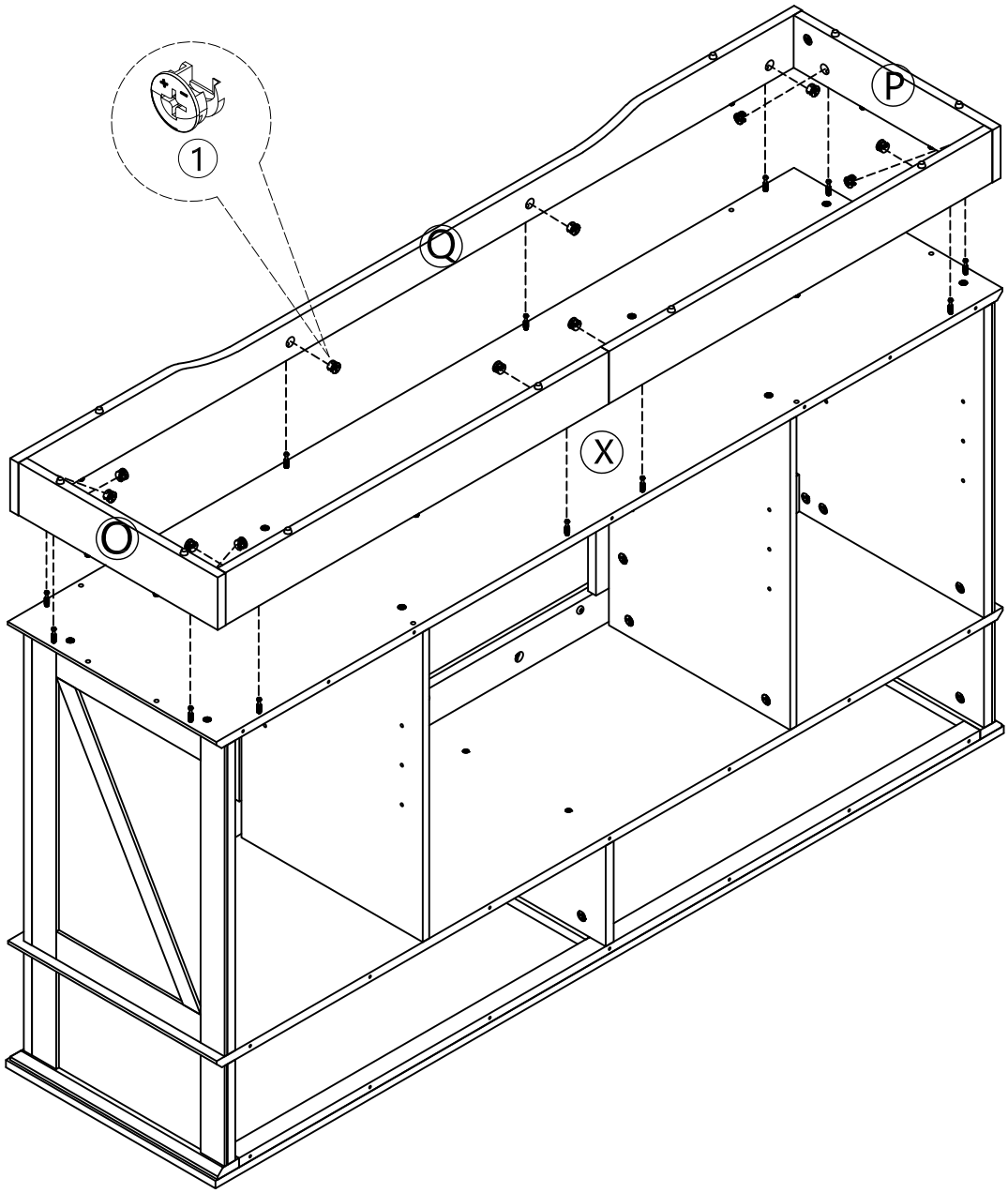

STEP 17

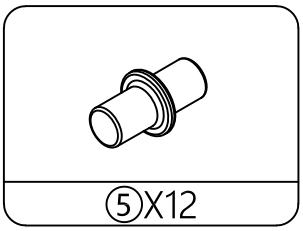

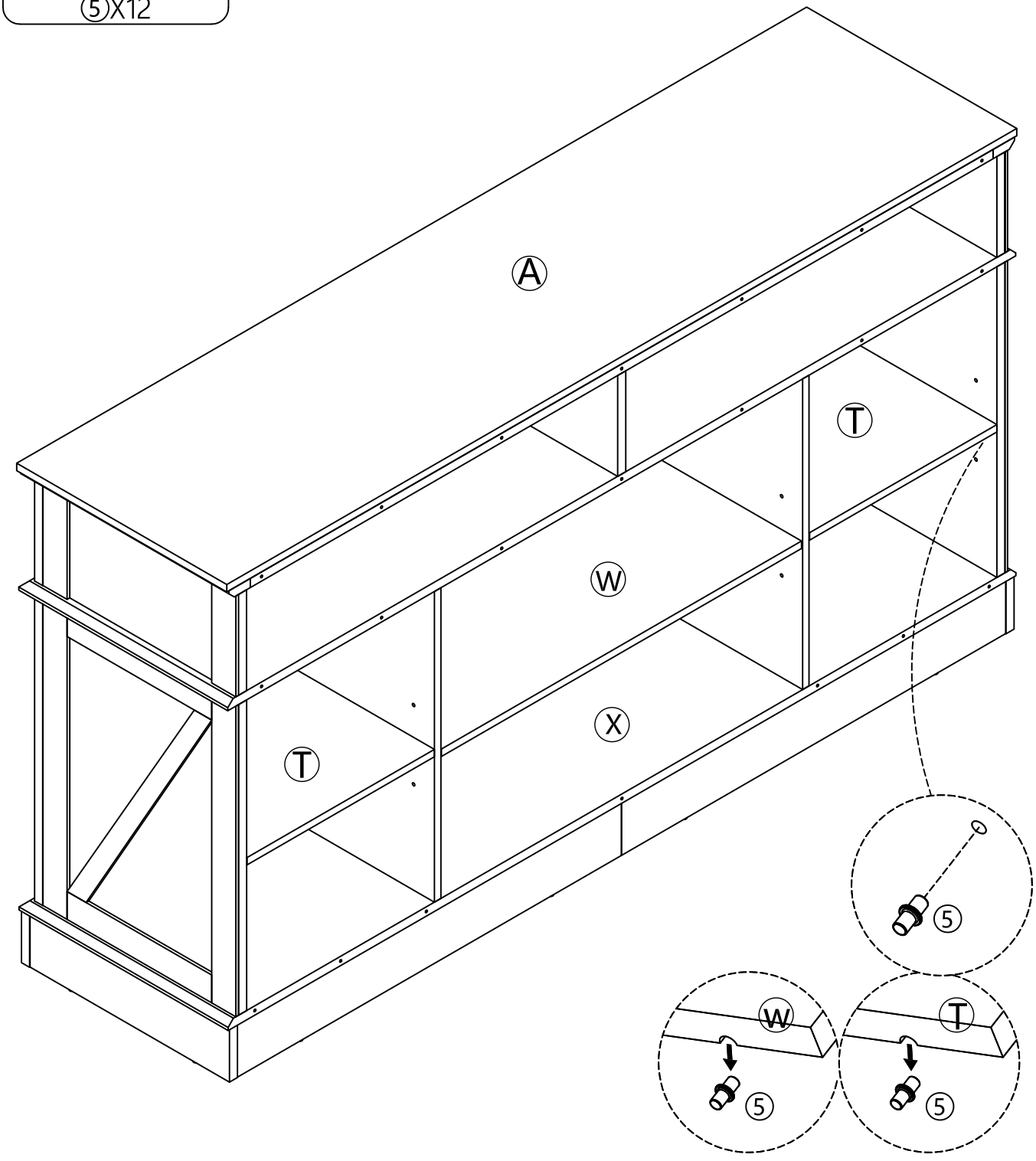

STEP 18

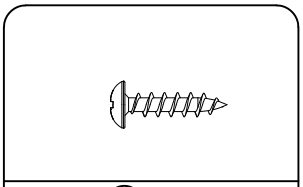

⑦X33

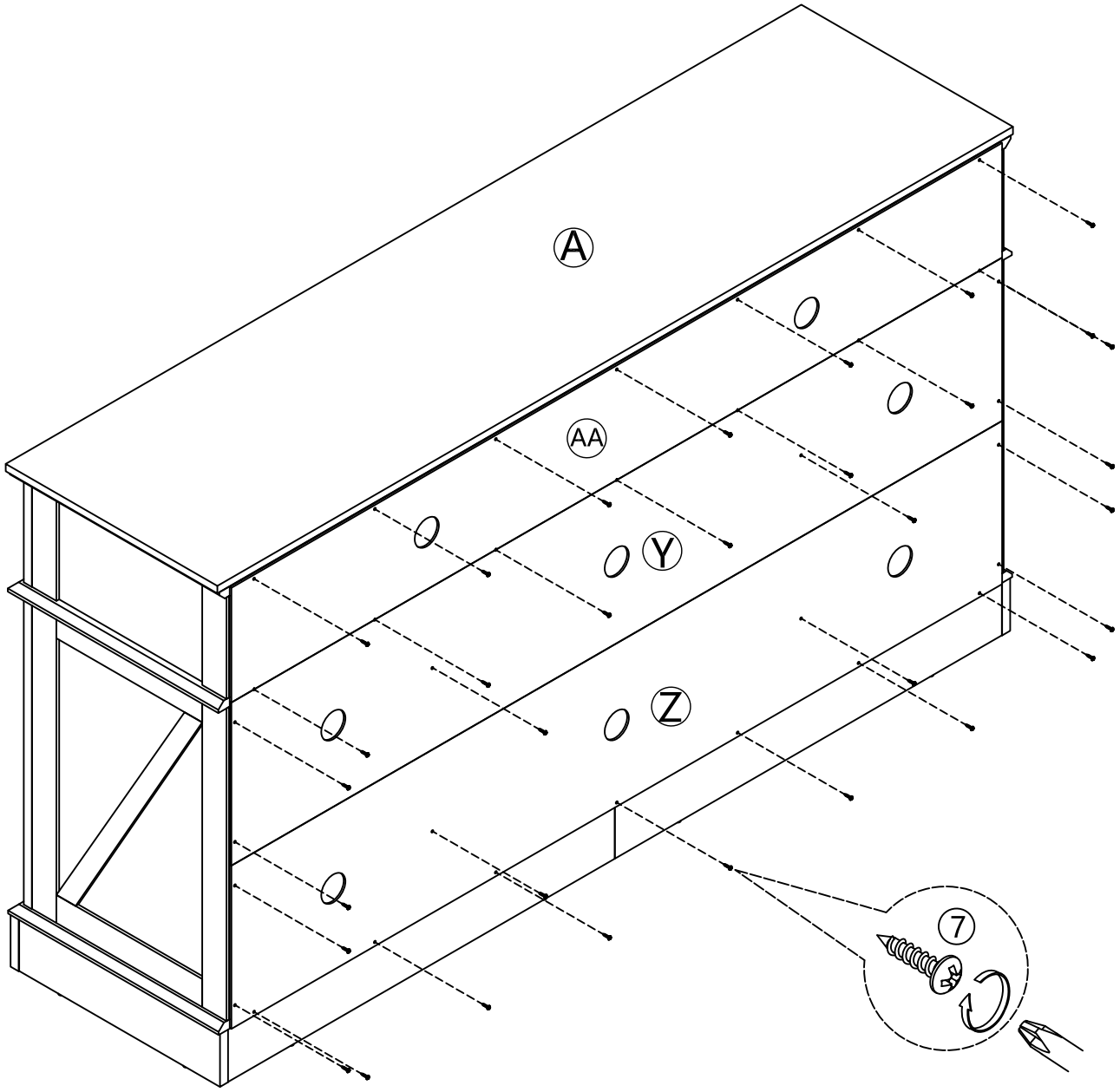

STEP 19

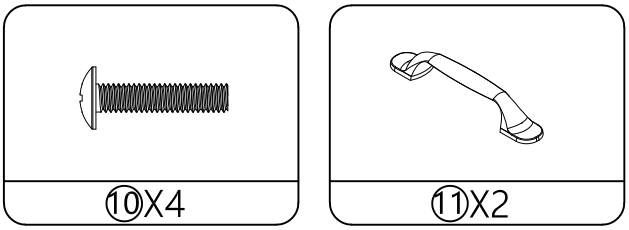

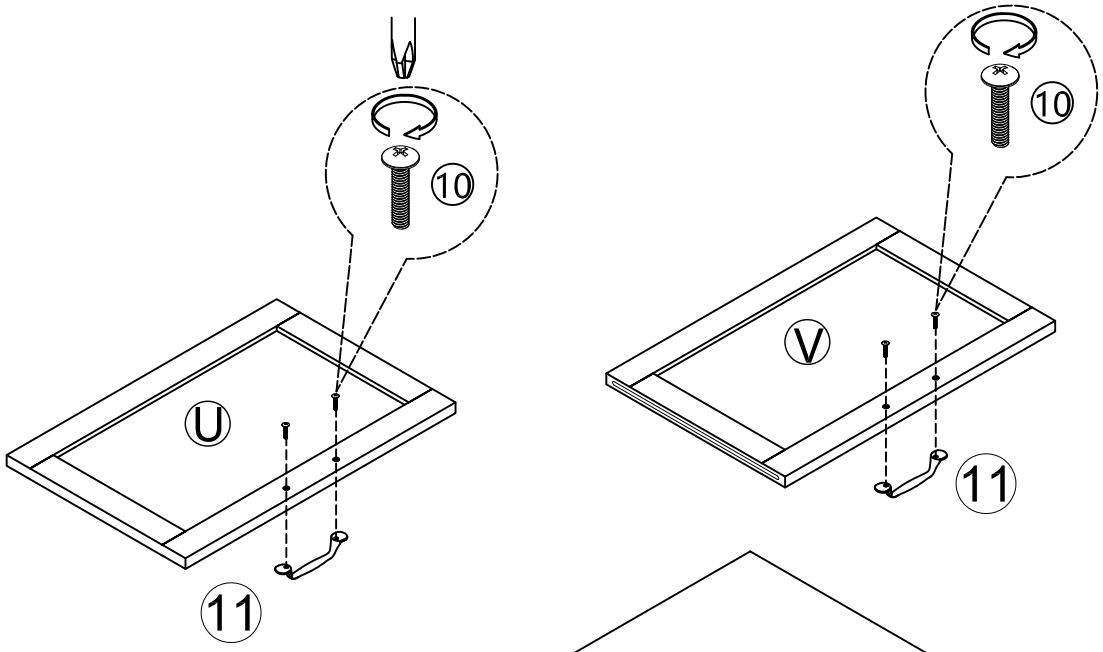

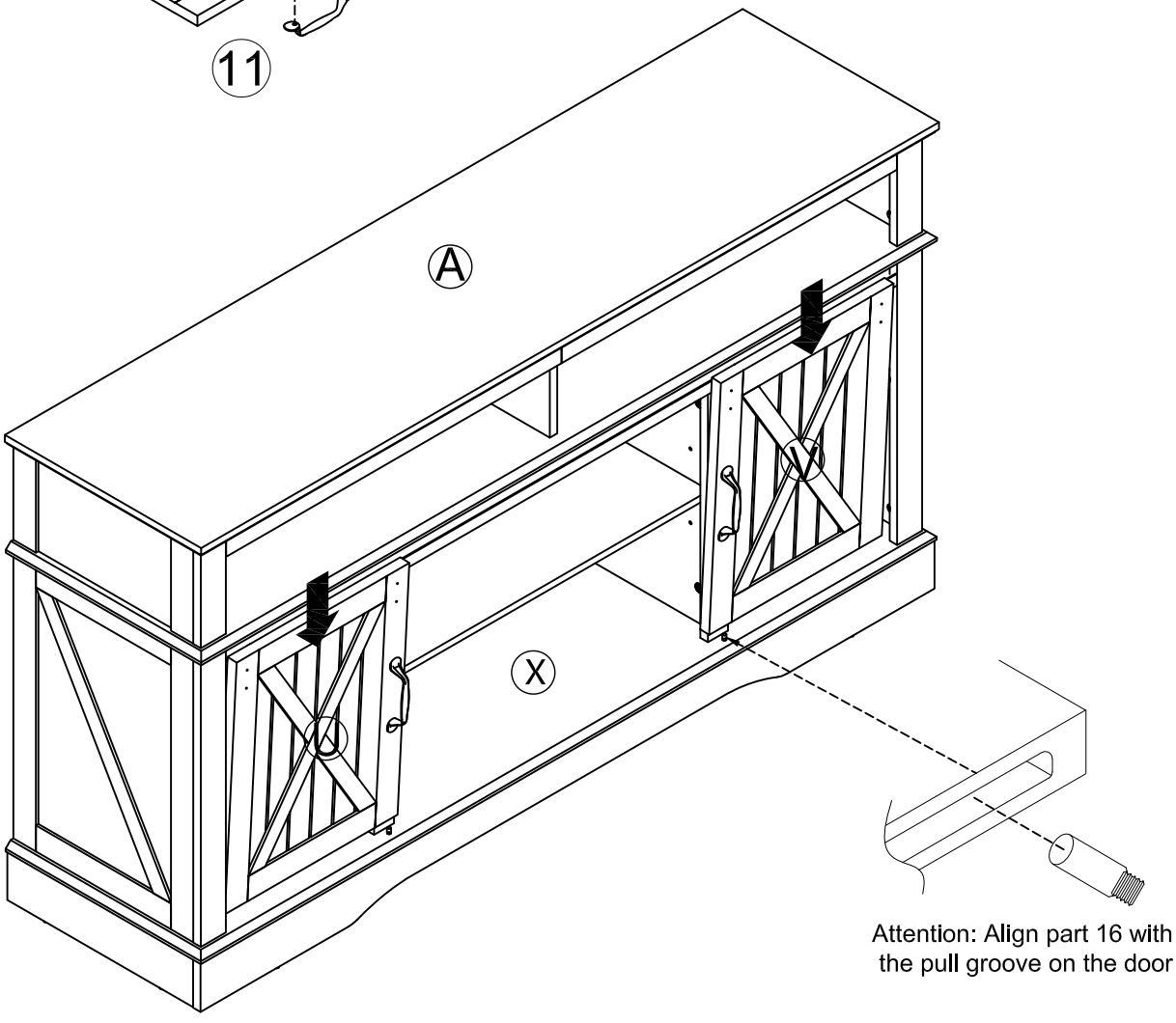

Attention: Align part 16 with the pull groove on the door

STEP 20

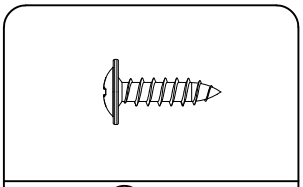

⑧X8

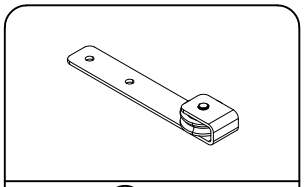

⑫X4

