ROCKPOINT®

USE AND CARE GUIDE
TV STAND WITH HIGH SLIDING BARN DOOR

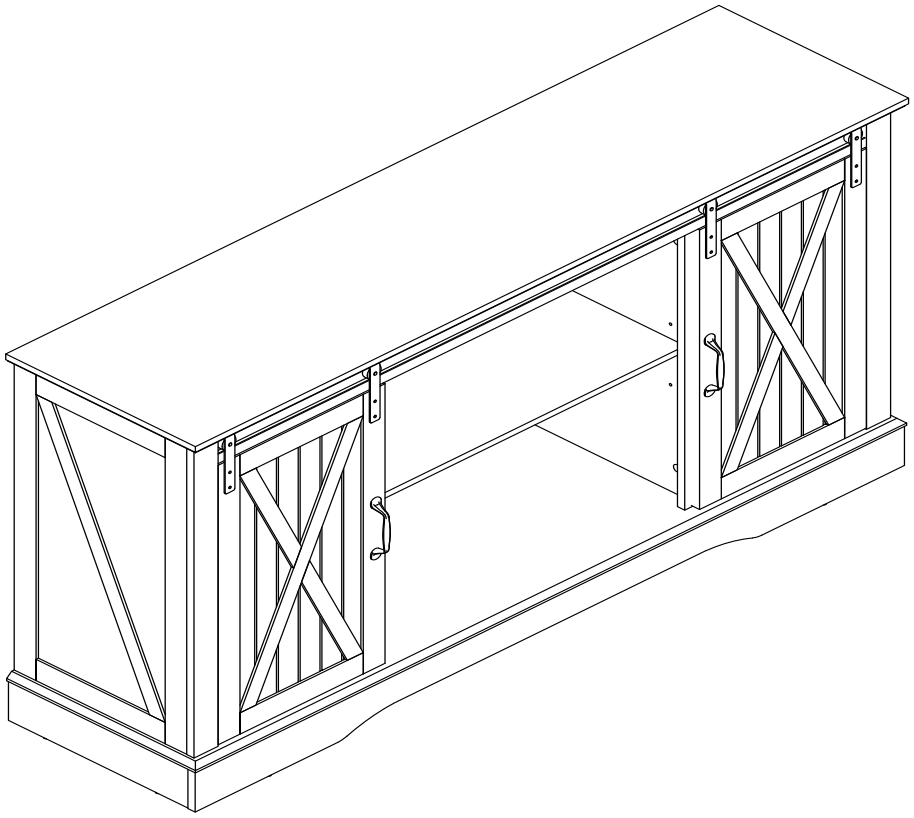

IMPORTANT

Questions,problems,assembly help,missing parts?

We will gladly help and ship your replacement parts free of charge.
If you have any question related to product please free to contact our customer service mail:Rockpointservice@hotmail.com
All the detail Assembly issue pls review the website:www.HiRockpoint.com

---

IMPORTANT

THIS INSTRUCTION CONTAINS IMPORTANT SAFETY INFORMATION.
PLEASE READ AND KEEP FOR FUTURE REFERENCE

WARNING

- Do not allow chlidren to climb on unit
- Serious or fatal crushing injuries can occur from furniture tip-over,To prevent this furniture from tipping over it must be permanently fixed to the wall.
- Fixing devices for the wall are not included since different wall materials require different types of fixing devices. Use fixing devices suitable for the walls in your home.For advice on suitable fixing systems,contact your local specialized dealer
- This unit contains small parts which can be swallowed by children and pets. Keep children and pets away during assembly. To avoid danger of suffocation, always keep plastic bags away from children and pets.

BEFORE YOU START

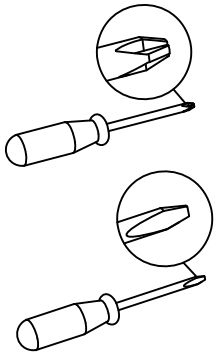

- Separate and count all parts and hardware.
- Have the following tools: Flat head Screwdriver,#2 Philips Head Screwdriver.
- If using a power tools,please be ware to slow down and stop when screw is tight.Failure to do so may result in stripping the screw.
- Requires two people for assembly.

CAM LOCK FASTENING SYSTEM

1

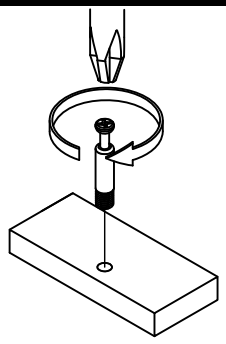

2

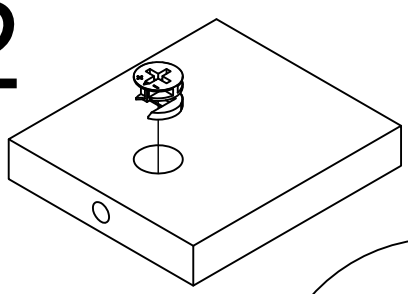

3

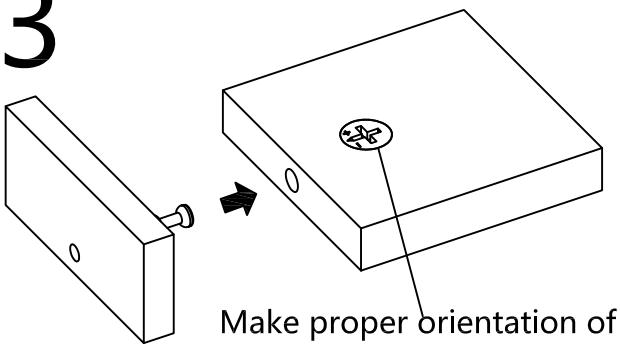

Make proper orientation of
CAM LOCK when inserting CAM PIN

4

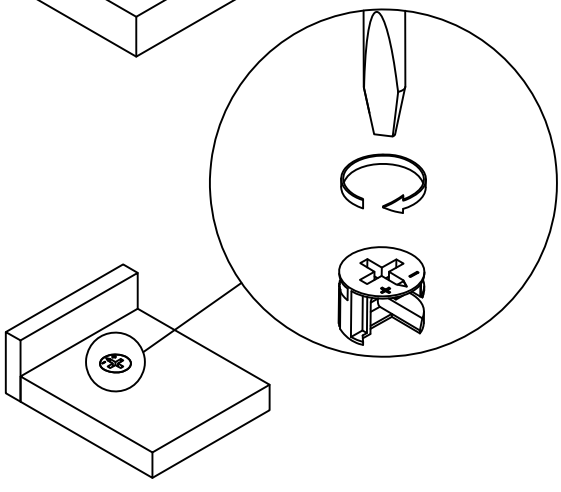

PARTS

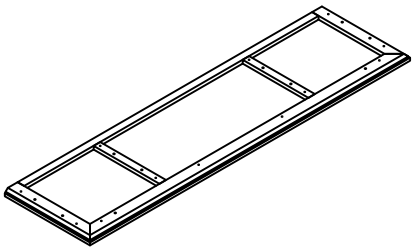

Ⓐ X1

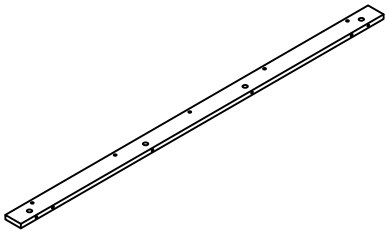

Ⓑ X1

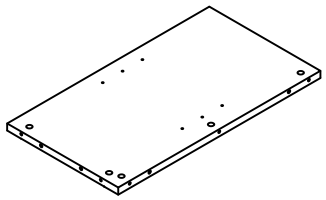

Ⓒ X1

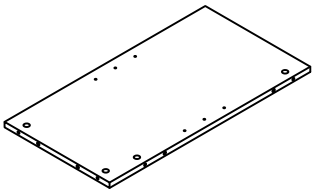

Ⓓ X1

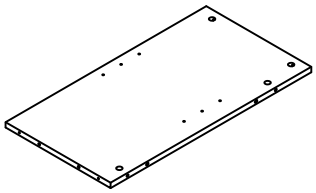

Ⓔ X1

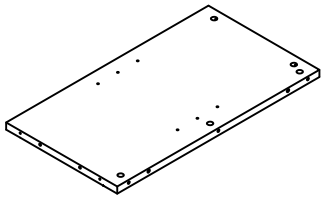

Ⓕ X1

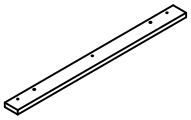

Ⓖ X2

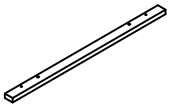

Ⓗ X2

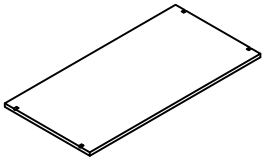

Ⓘ X1

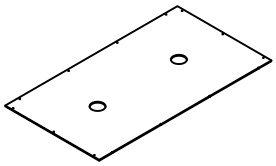

Ⓙ X2

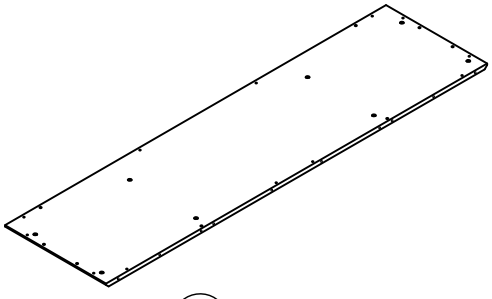

Ⓚ X1

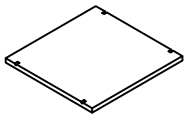

Ⓛ X2

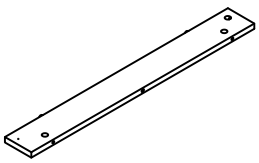

Ⓜ X1

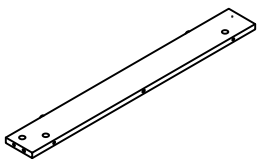

Ⓝ X1

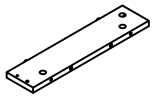

Ⓞ X1

PARTS

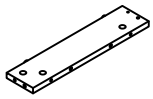

Ⓟ X1

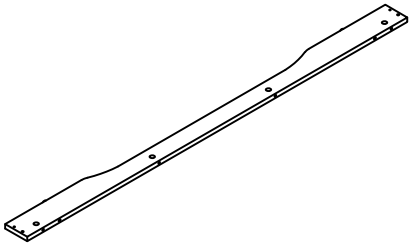

Ⓠ X1

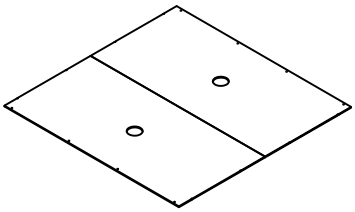

Ⓡ X1

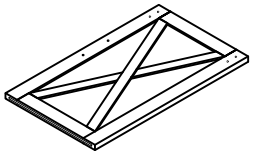

Ⓢ X1

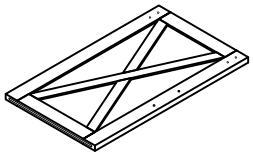

Ⓣ X1

Part List



Ø15X9.5mm

1	X38

CAM LOCK
spare:3

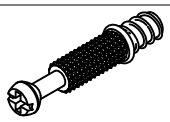

Ø6.5X35mm

2	X38

CAM BOLT
spare:3



Ø6X30mm

3	X38

WOODEN DOWEL
spare:3

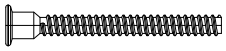

Ø6.3X50mm

4	X8

SCREW
spare:1

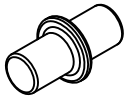

5	X12

SHELF SUPPORT
spare:1

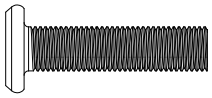

M6X25mm

6	X5

BOLT
spare:1

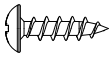

Ø3X14mm

7	X36

SCREW
spare:3

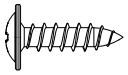

Ø4X14mm

8	X10

SCREW
spare:2

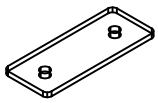

9	X1

METAL PLANT



M4X20mm

10	X4

BOLT
spare:1

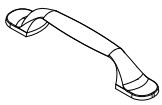

130X20X20mm

11	X2

HANDLE

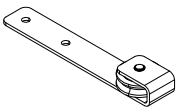

119X20X14mm

12	X4

METAL SLIDE

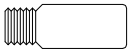

M6X18mm

13	X2

SLIDING DOOR

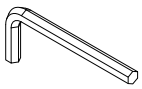

4X65mm

14	X1

HEX KEY

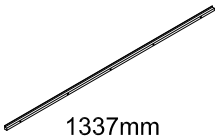

1337mm

15	X1

SLIDING RAIL

EXPLOSION DIAGRAM

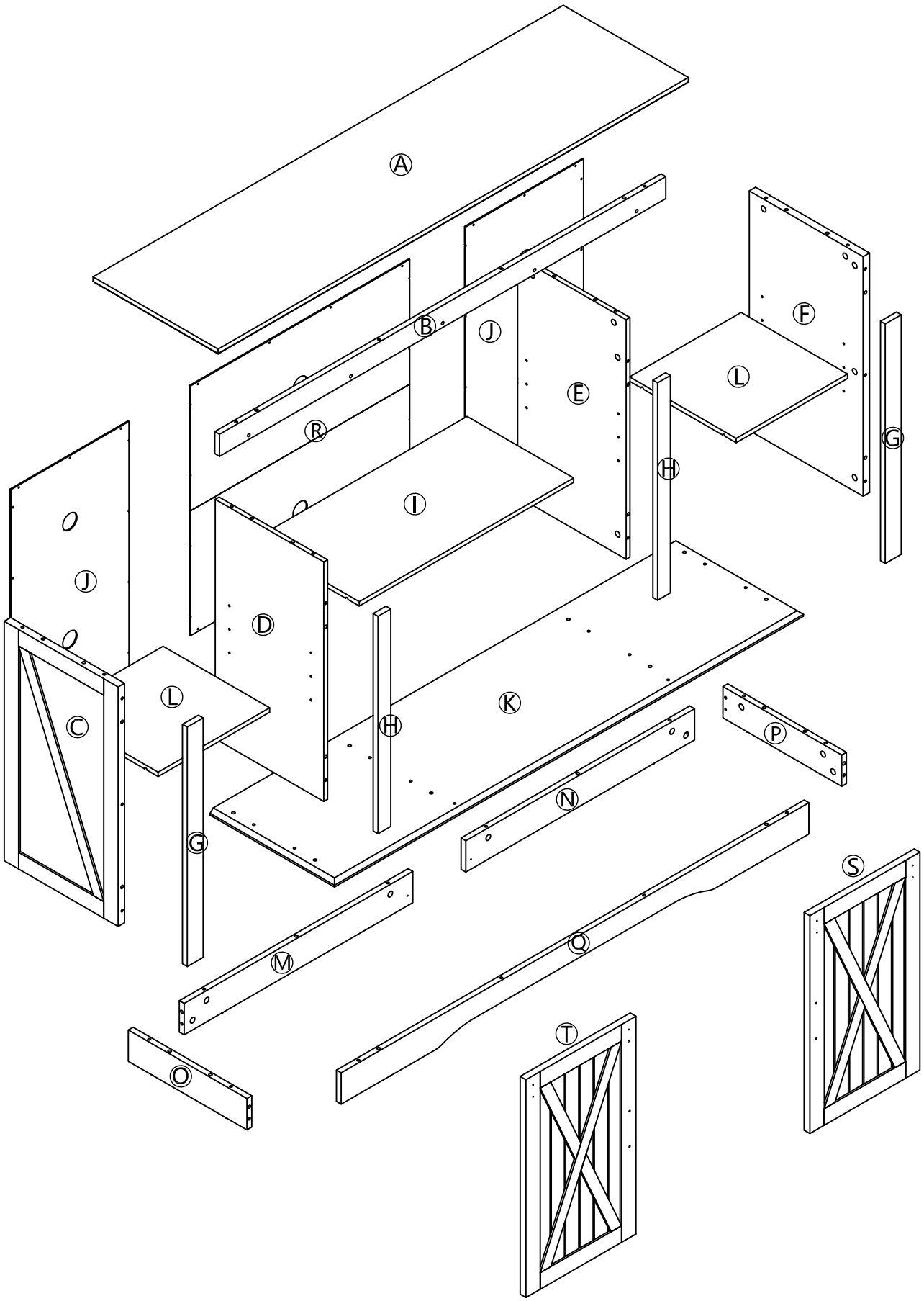

STEP 1

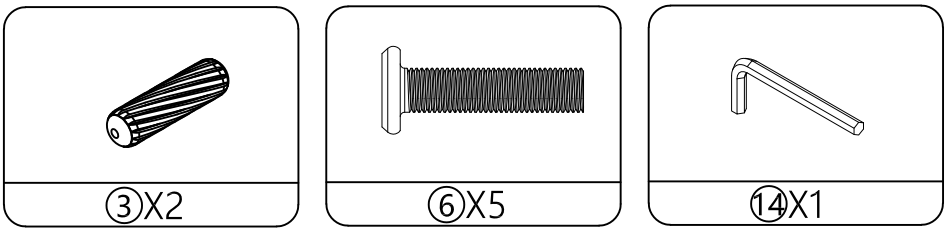

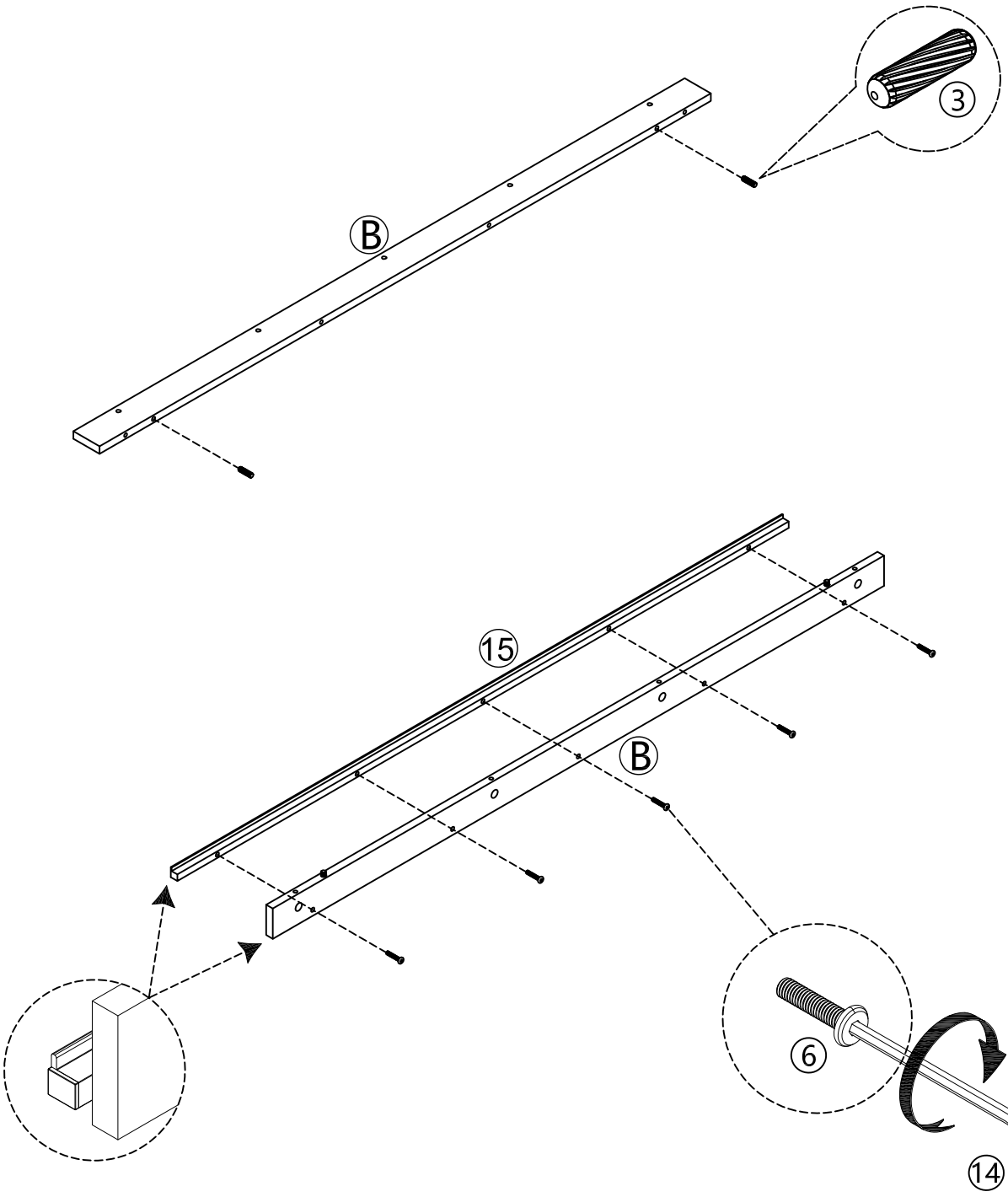

STEP 2

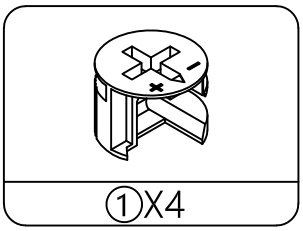

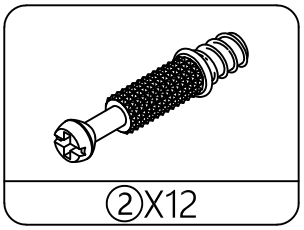

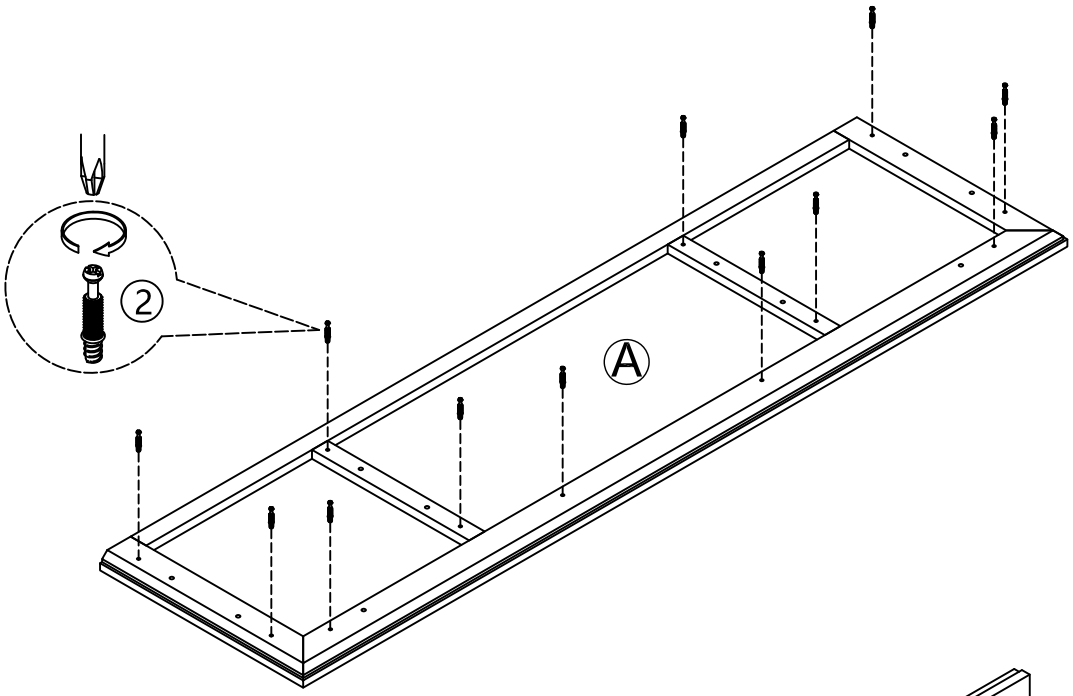

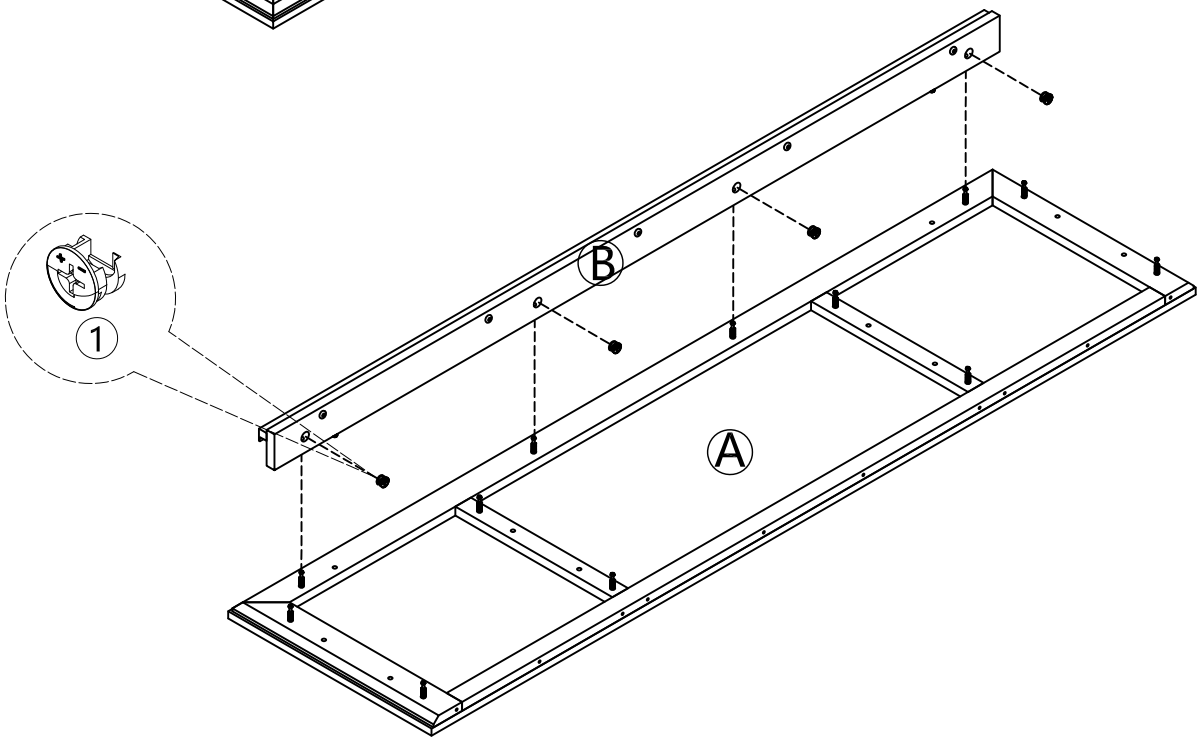

STEP 3

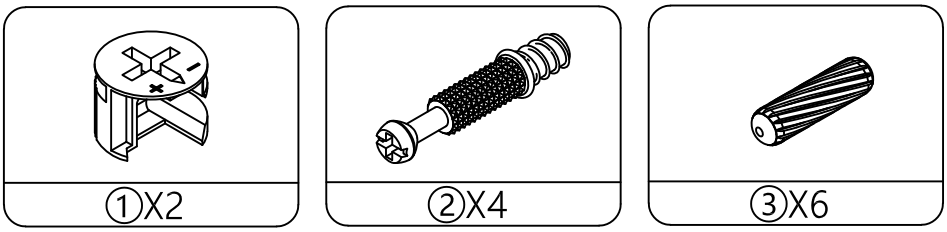

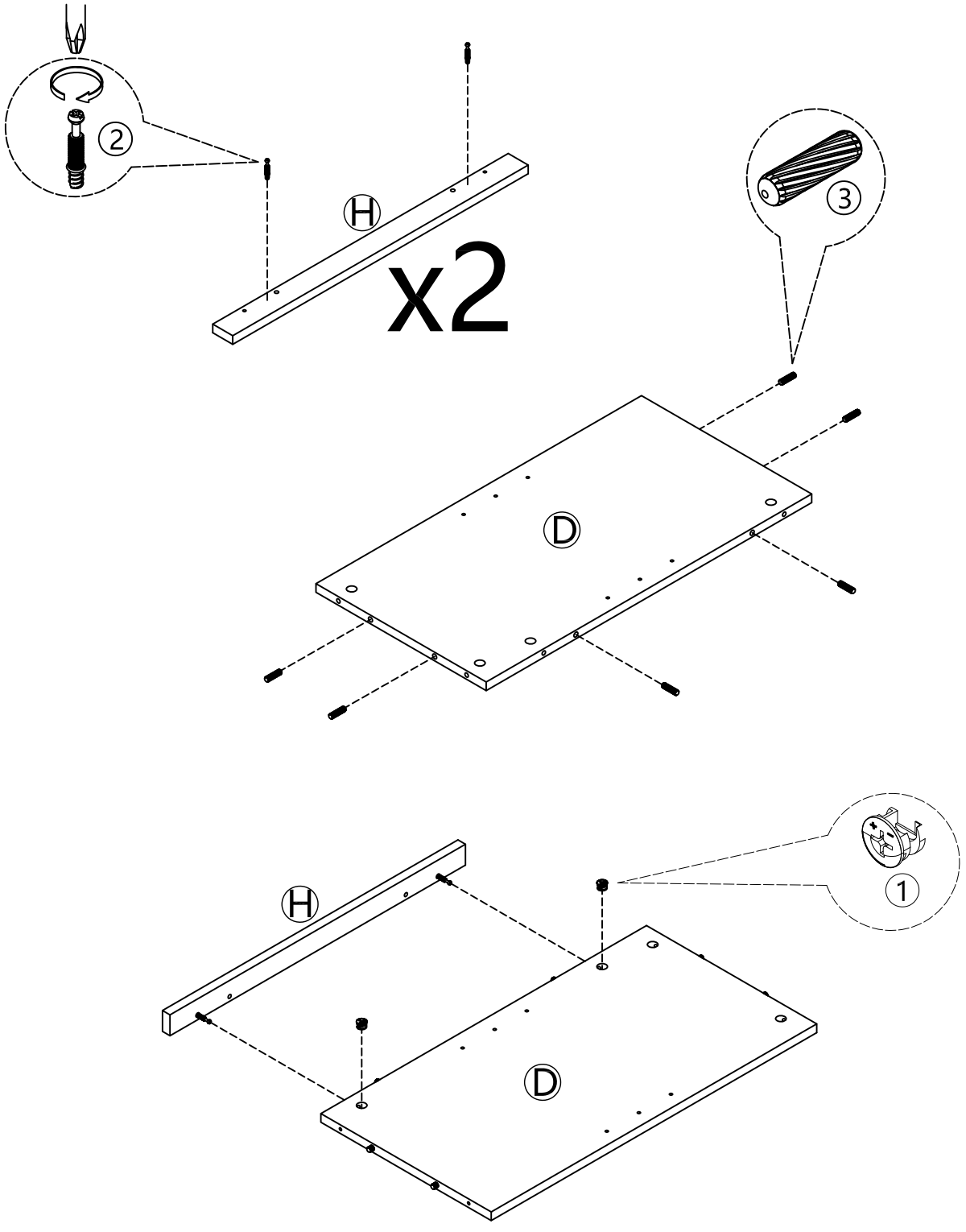

STEP 4

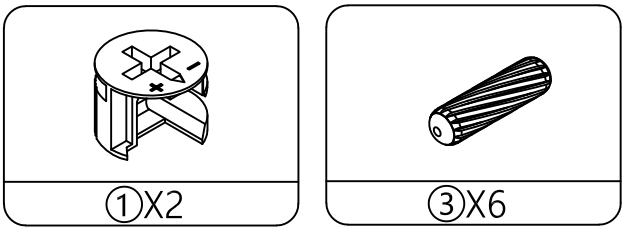

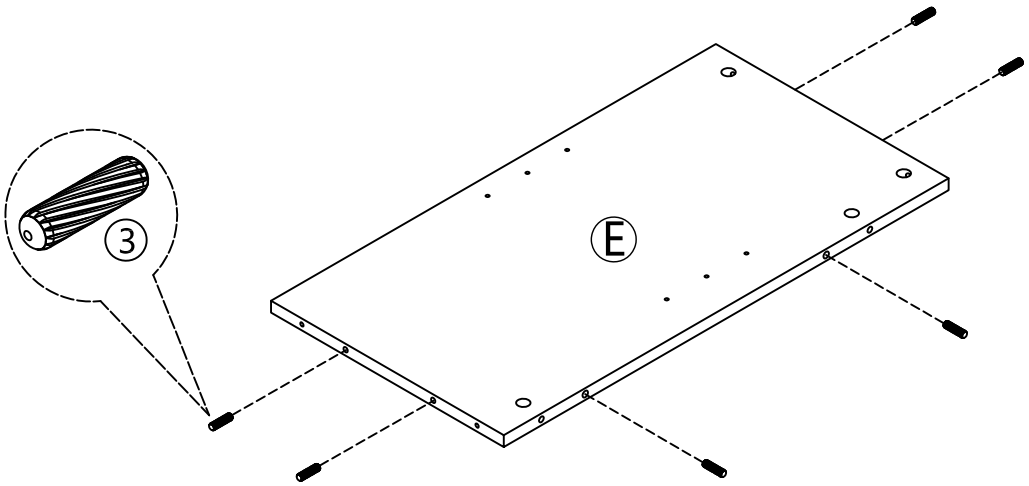

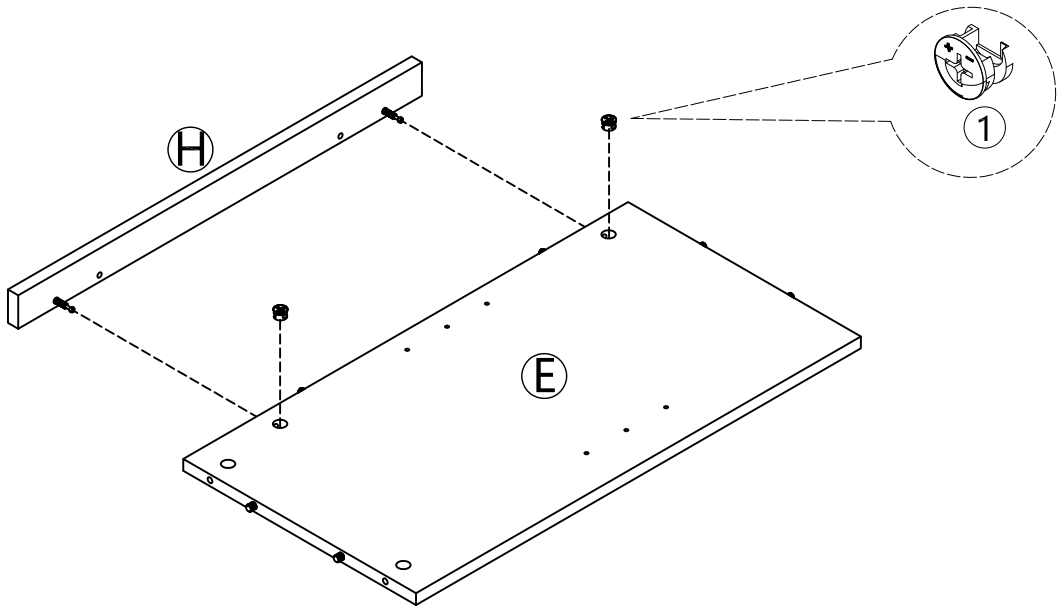

STEP 5

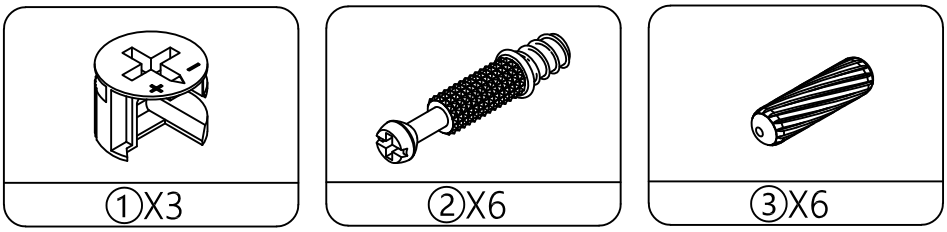

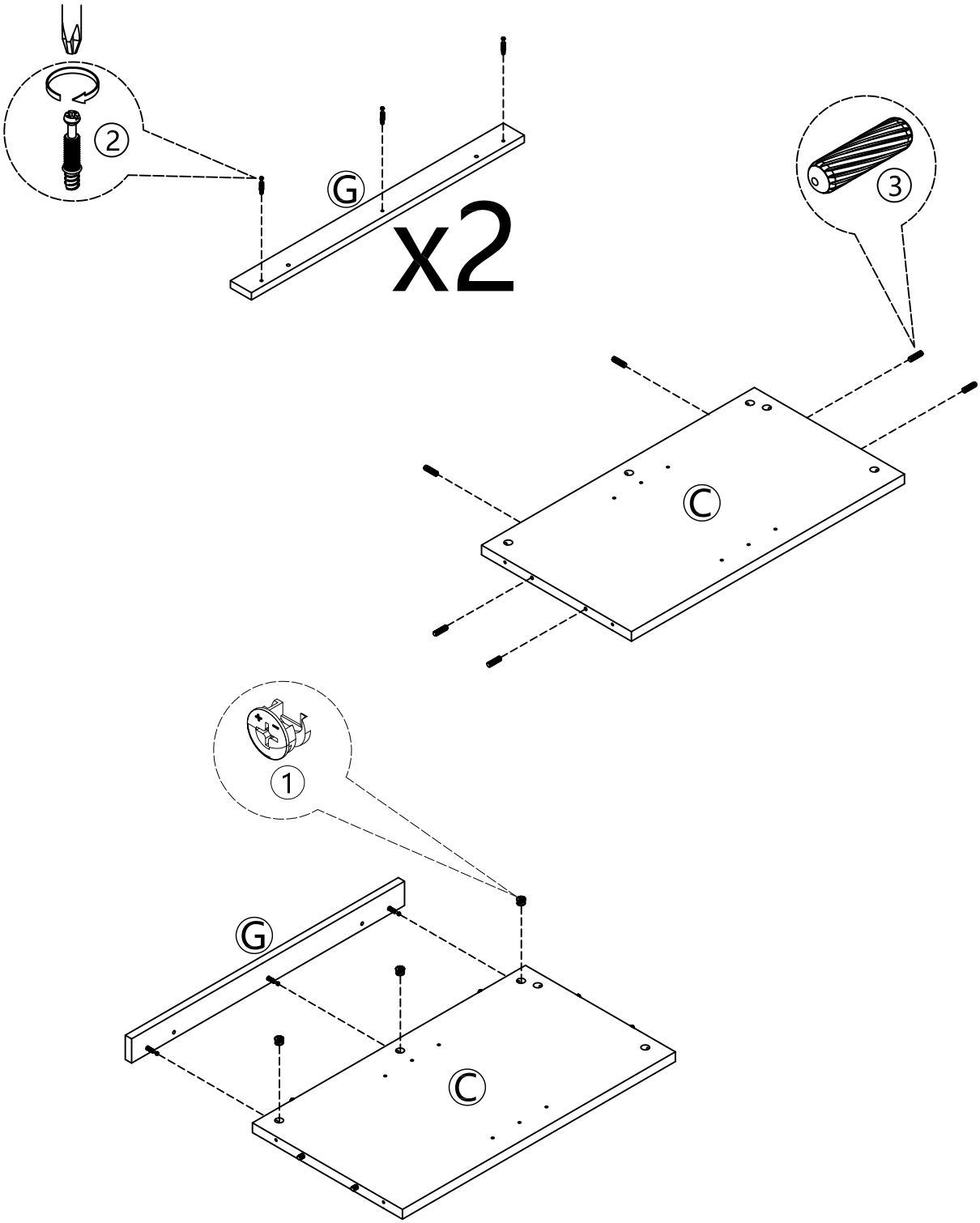

STEP 6

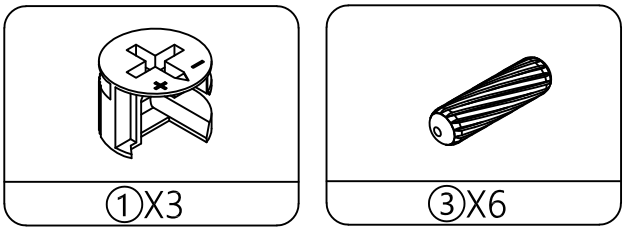

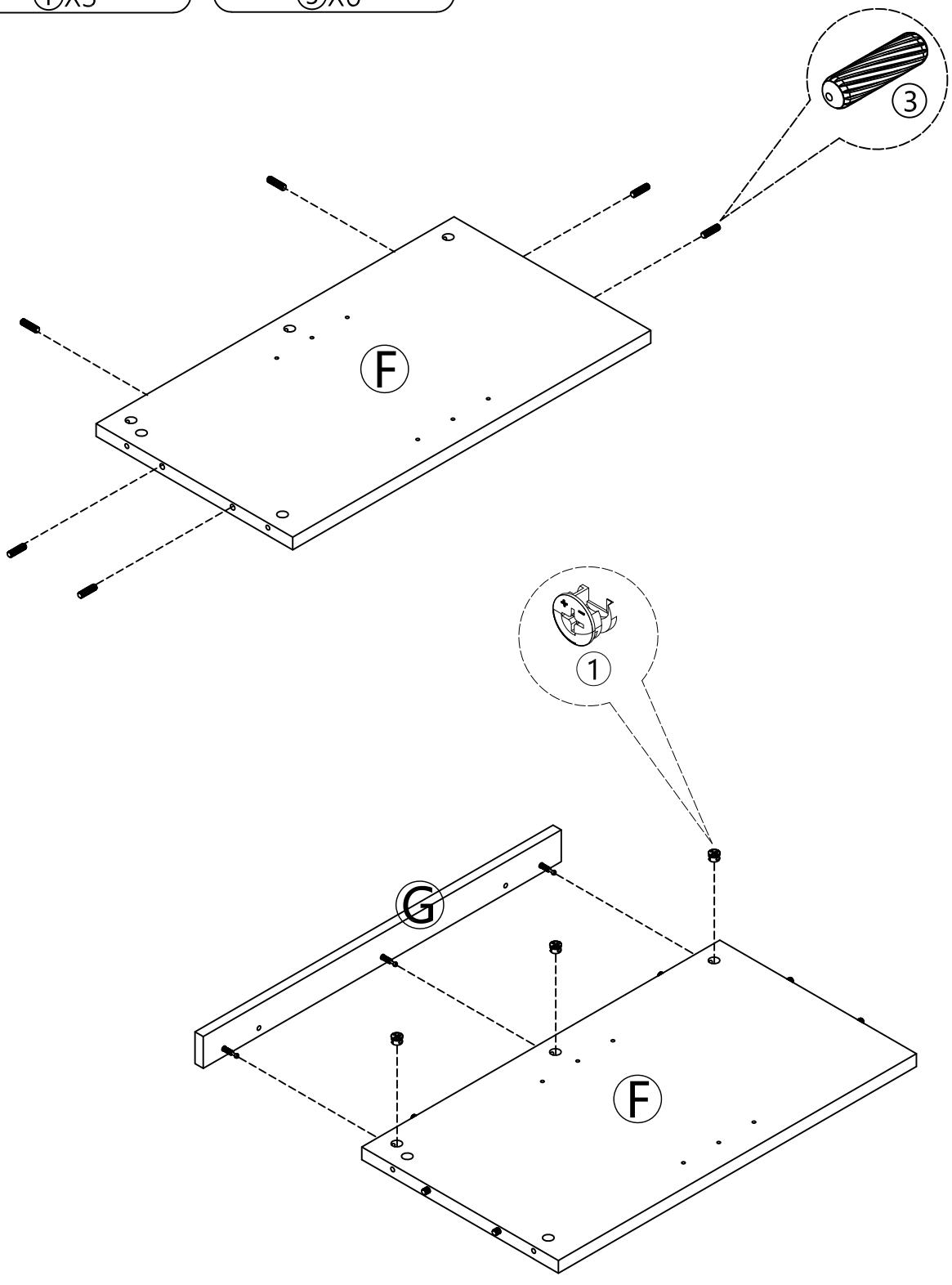

STEP 7

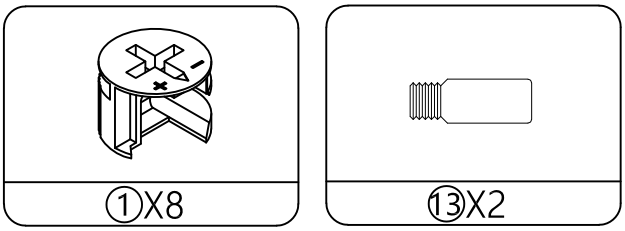

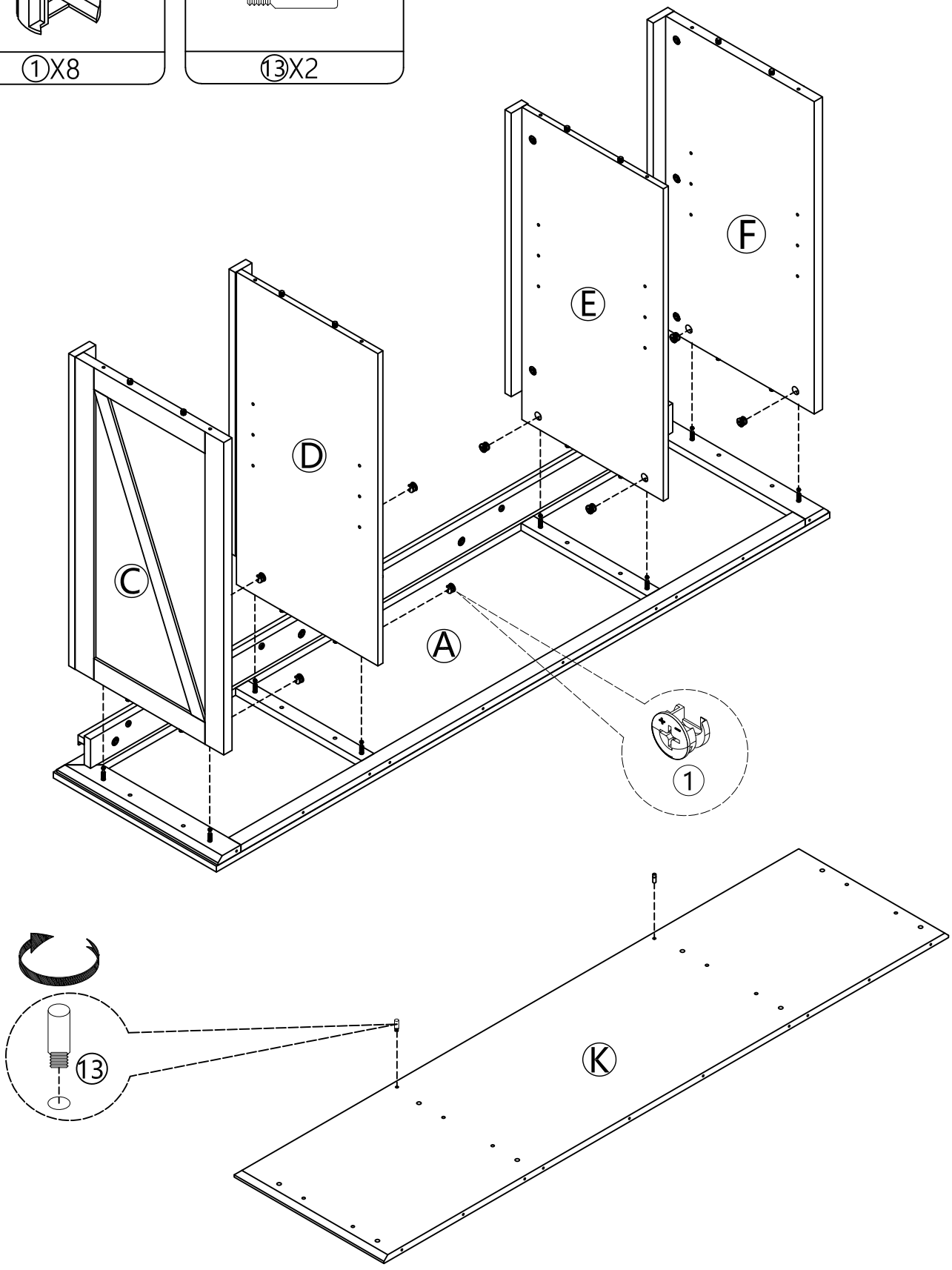

STEP 8

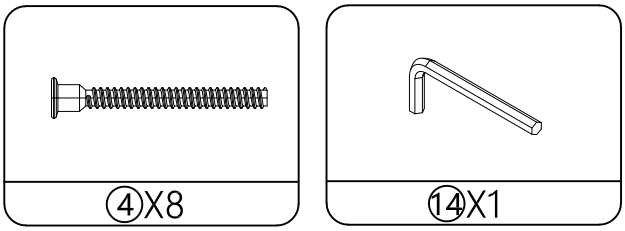

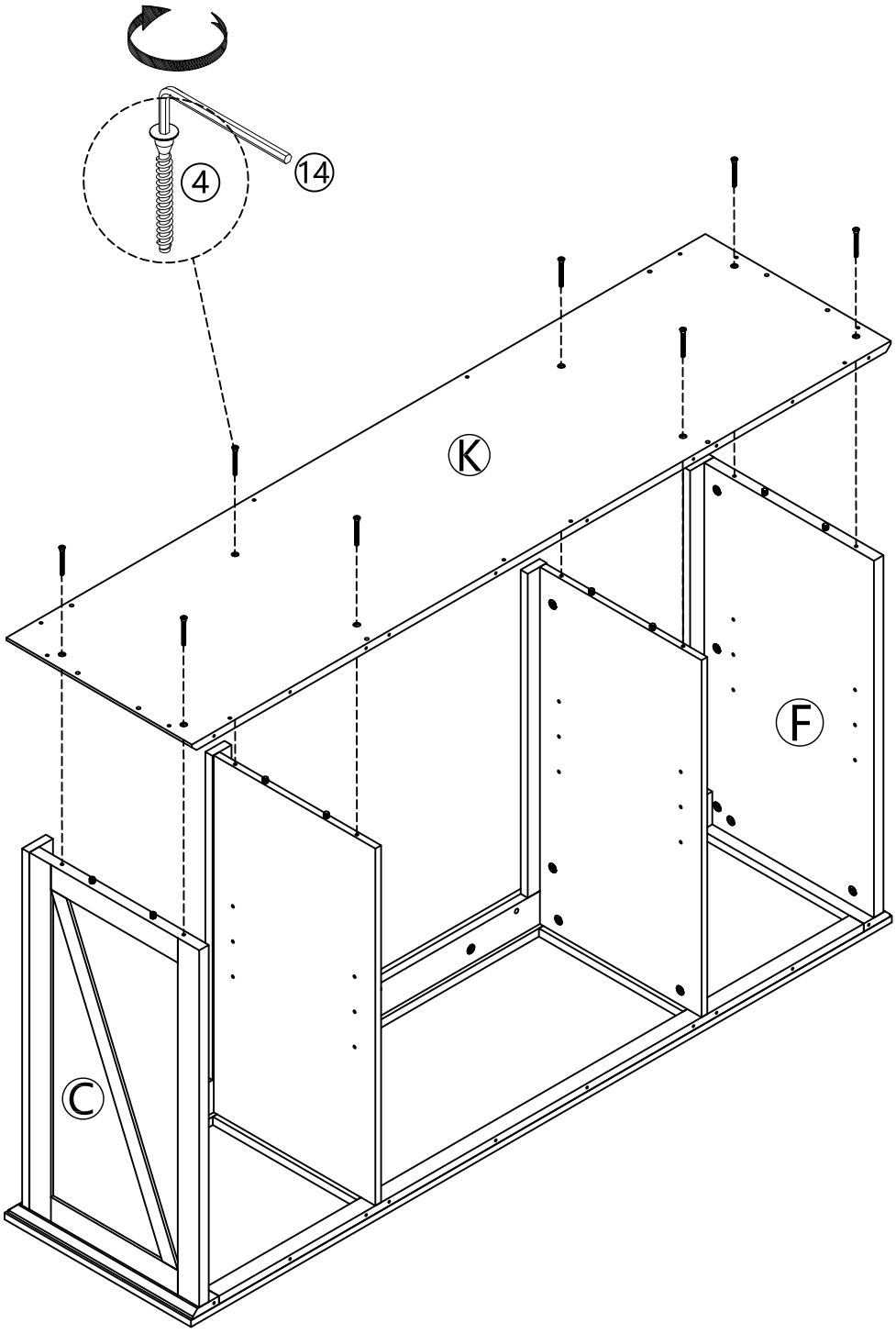

STEP 9

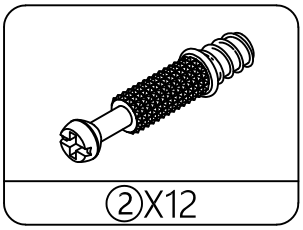

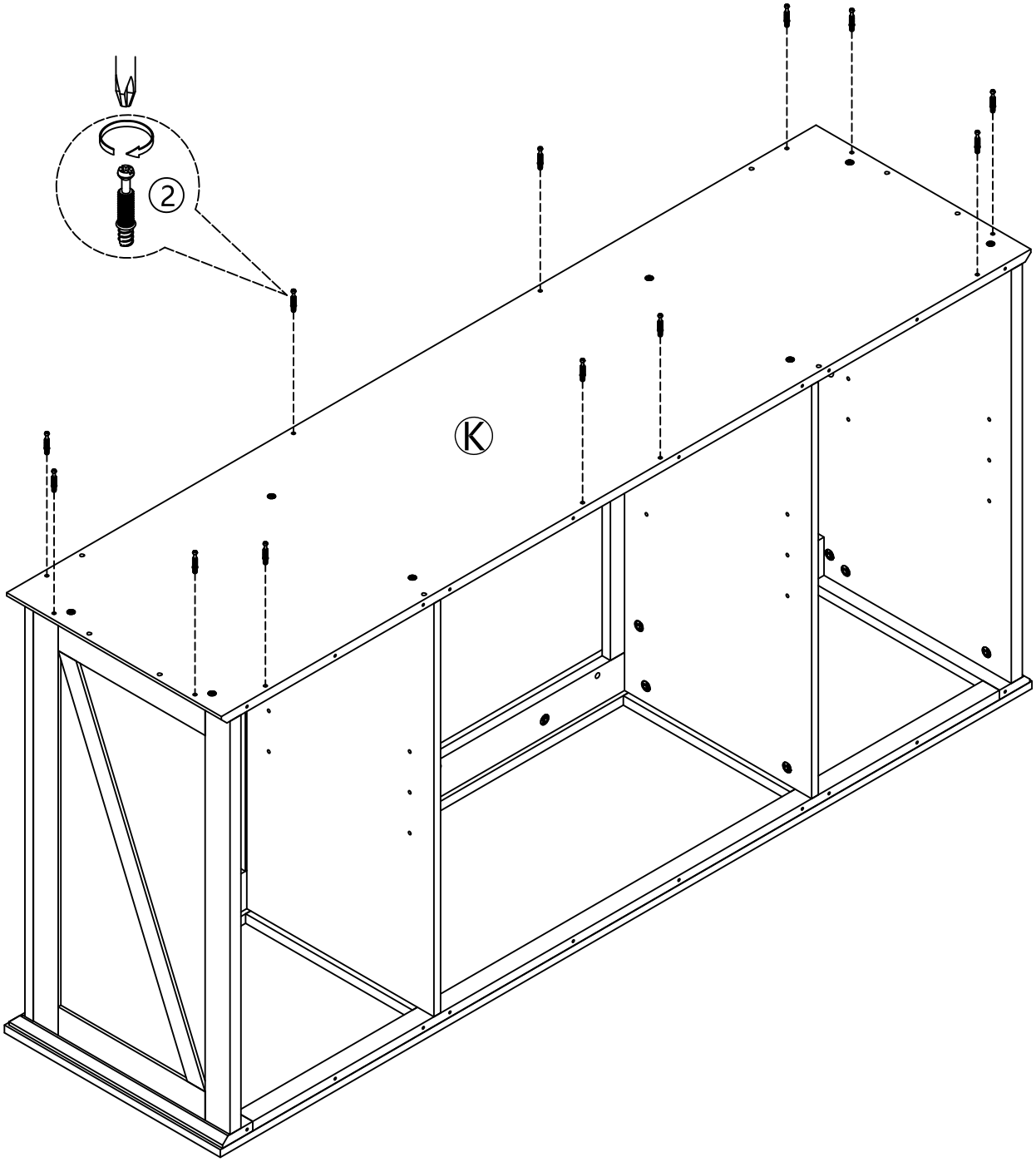

STEP 10

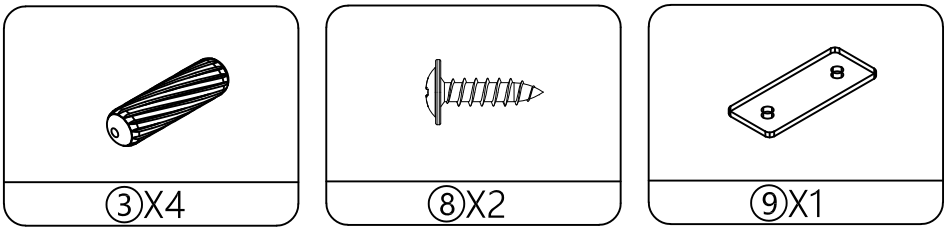

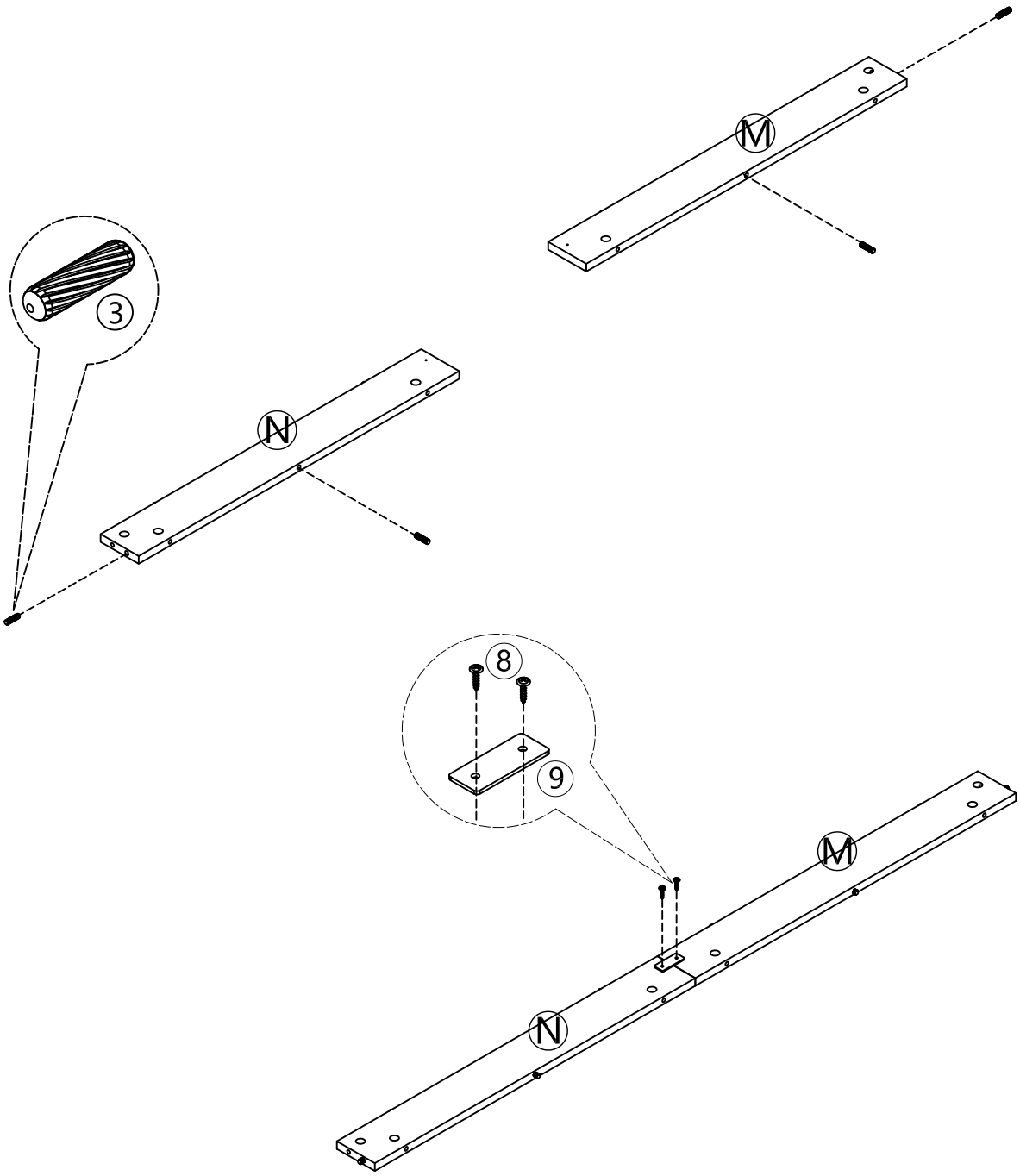

STEP 11

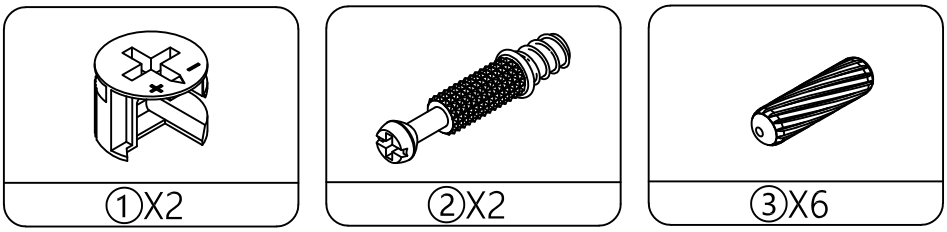

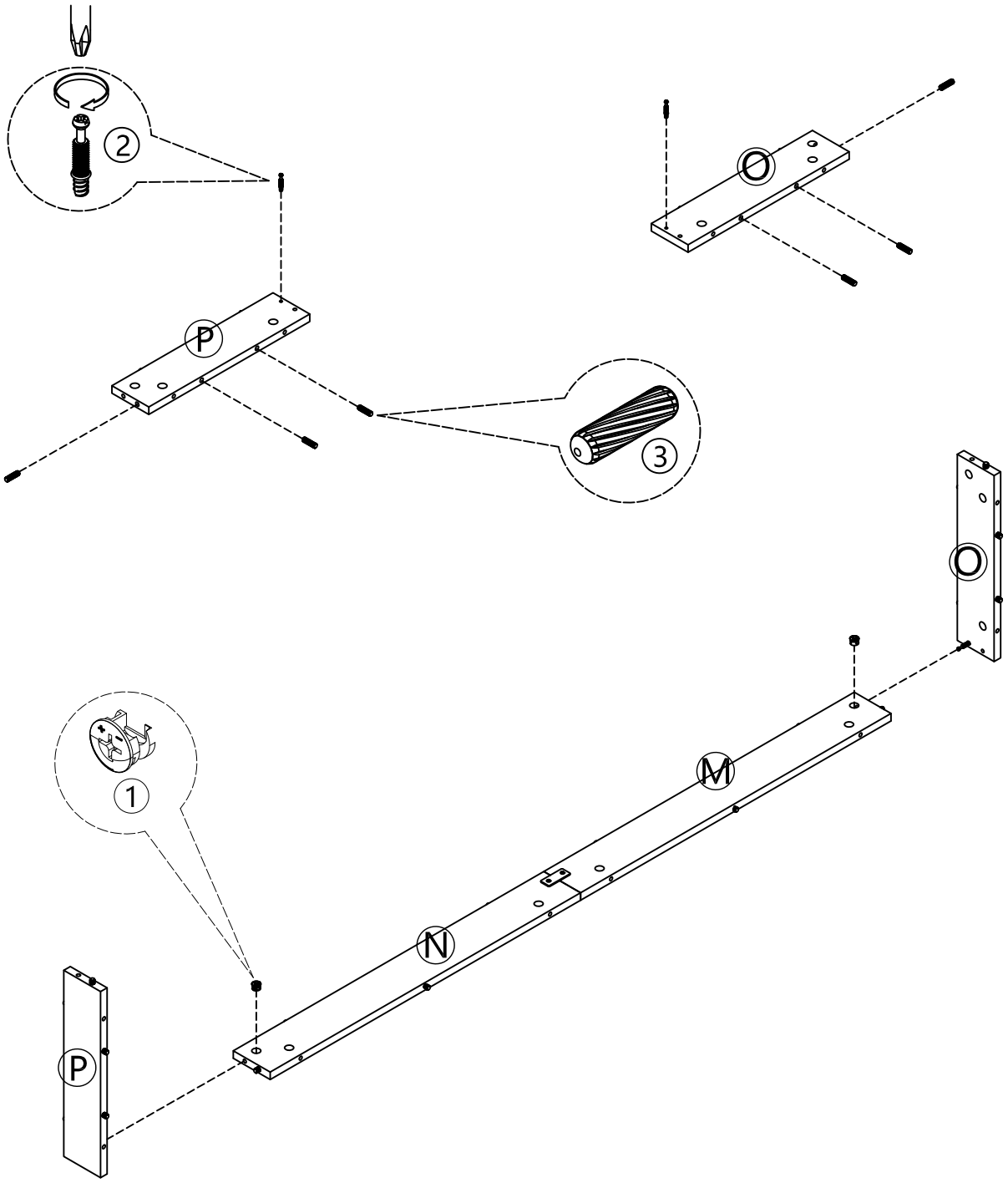

STEP 12

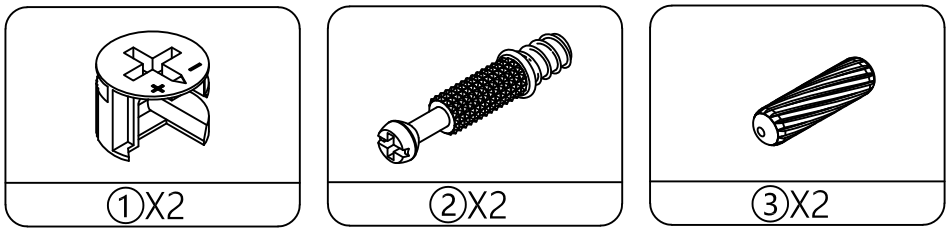

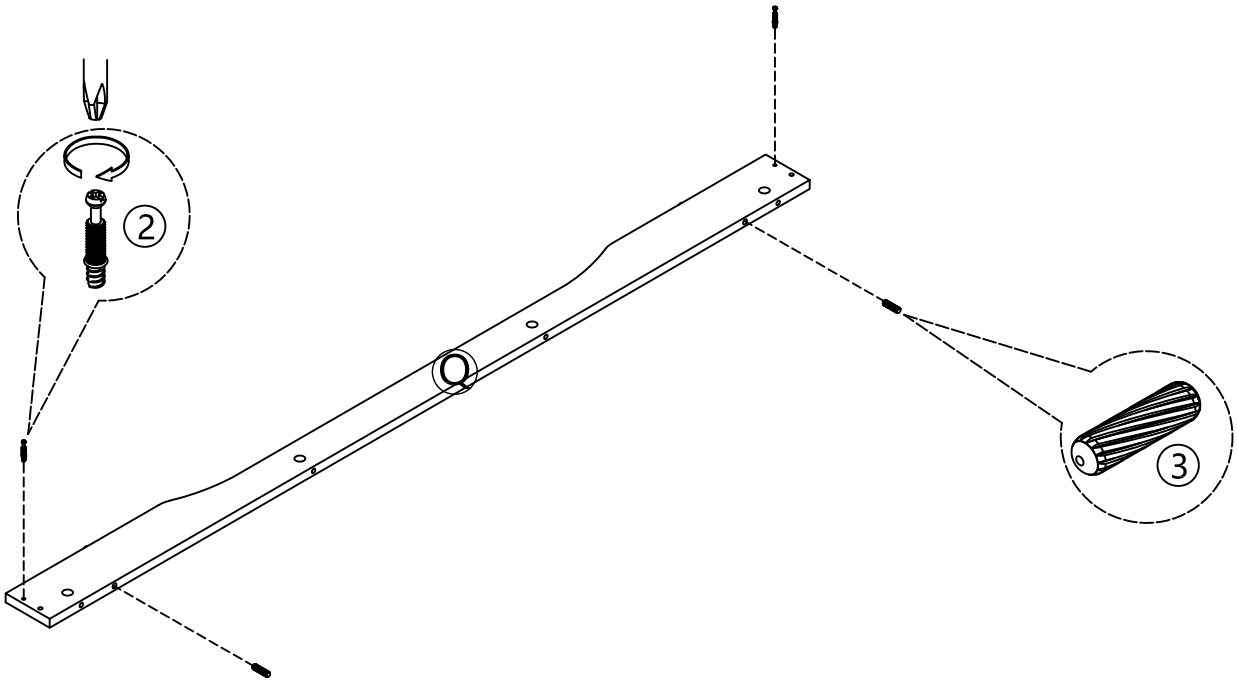

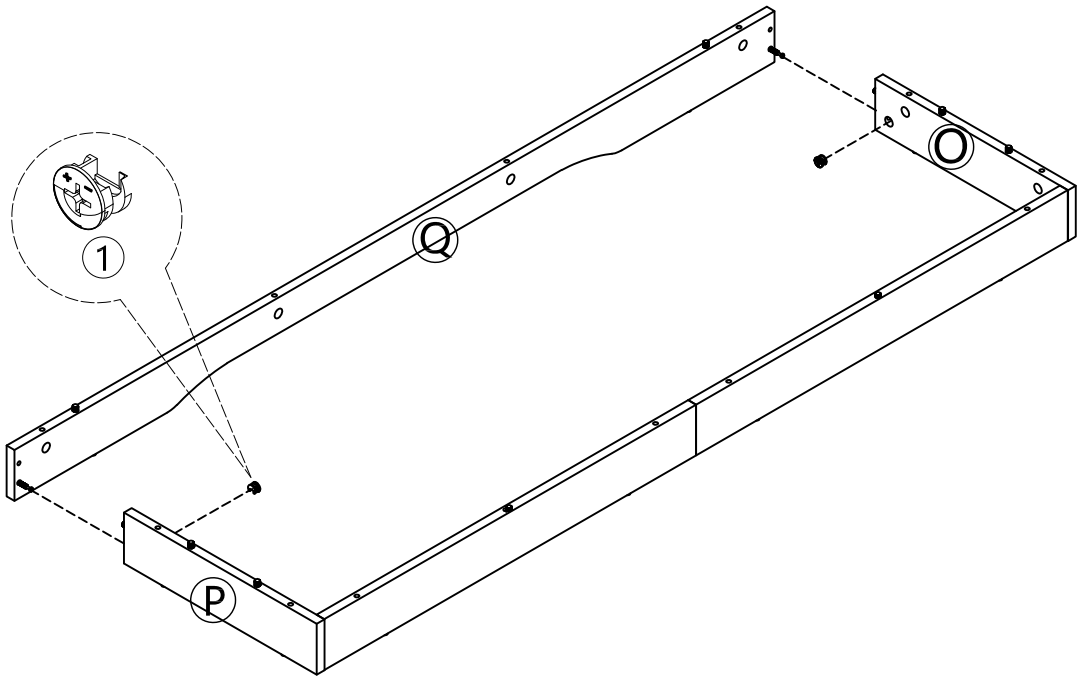

STEP 13

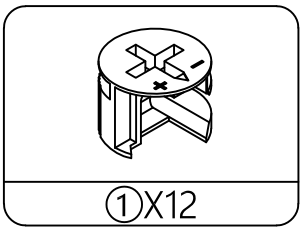

THIS STEP REQUIRES 2 PEOPLE

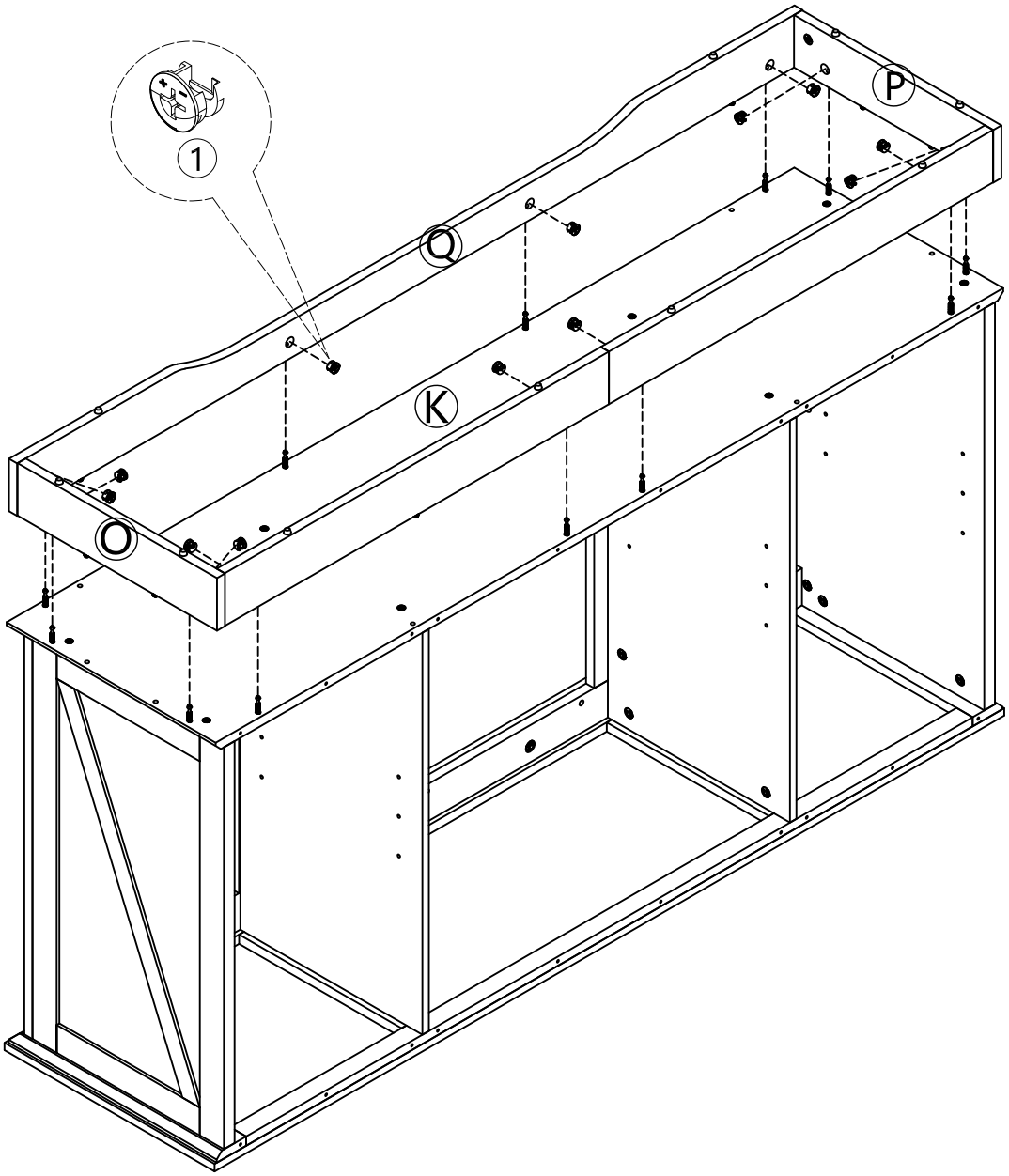

STEP 14

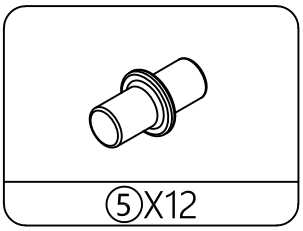

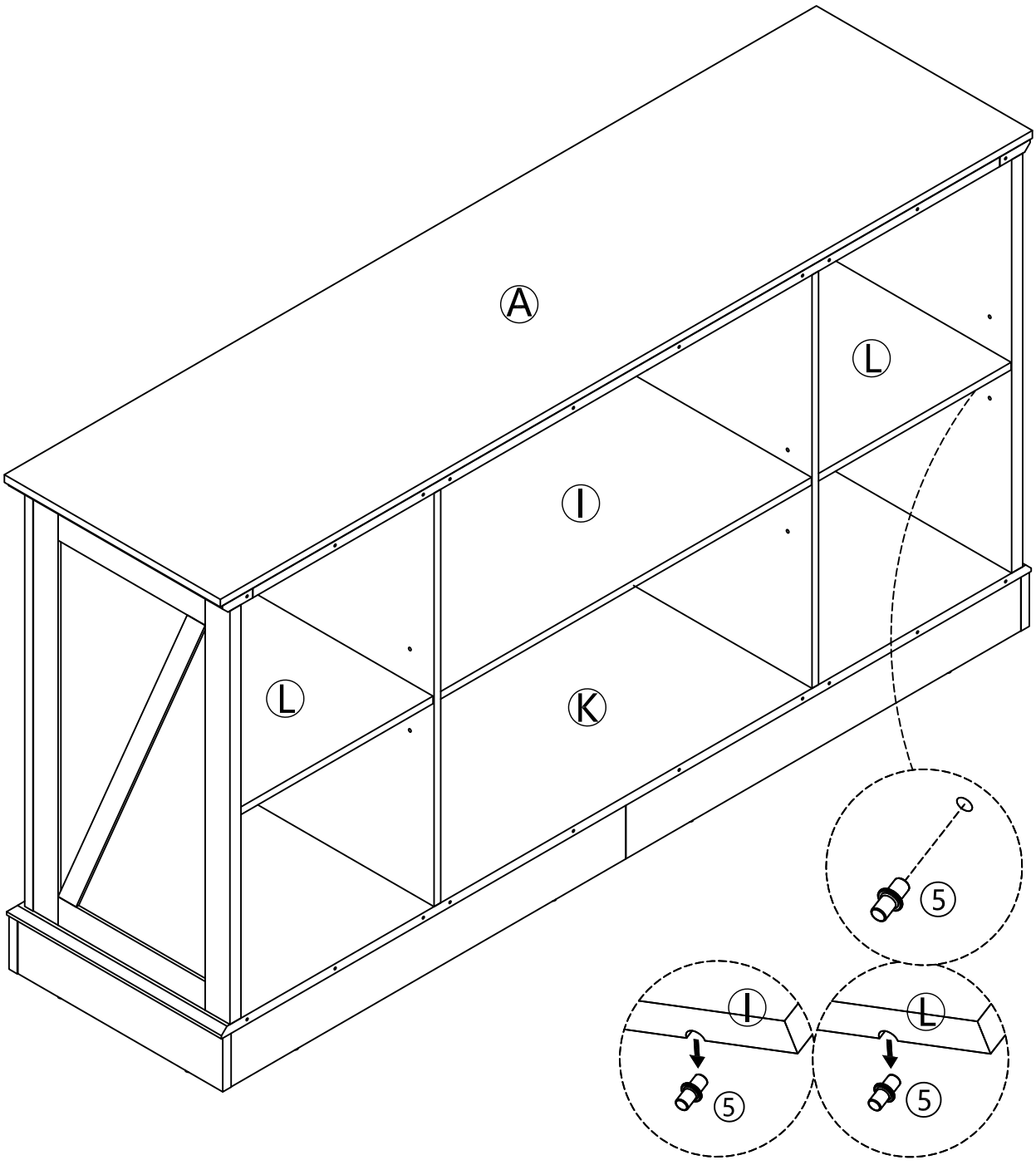

STEP 15

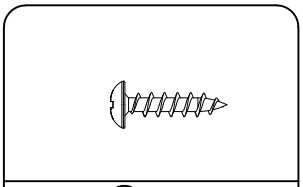

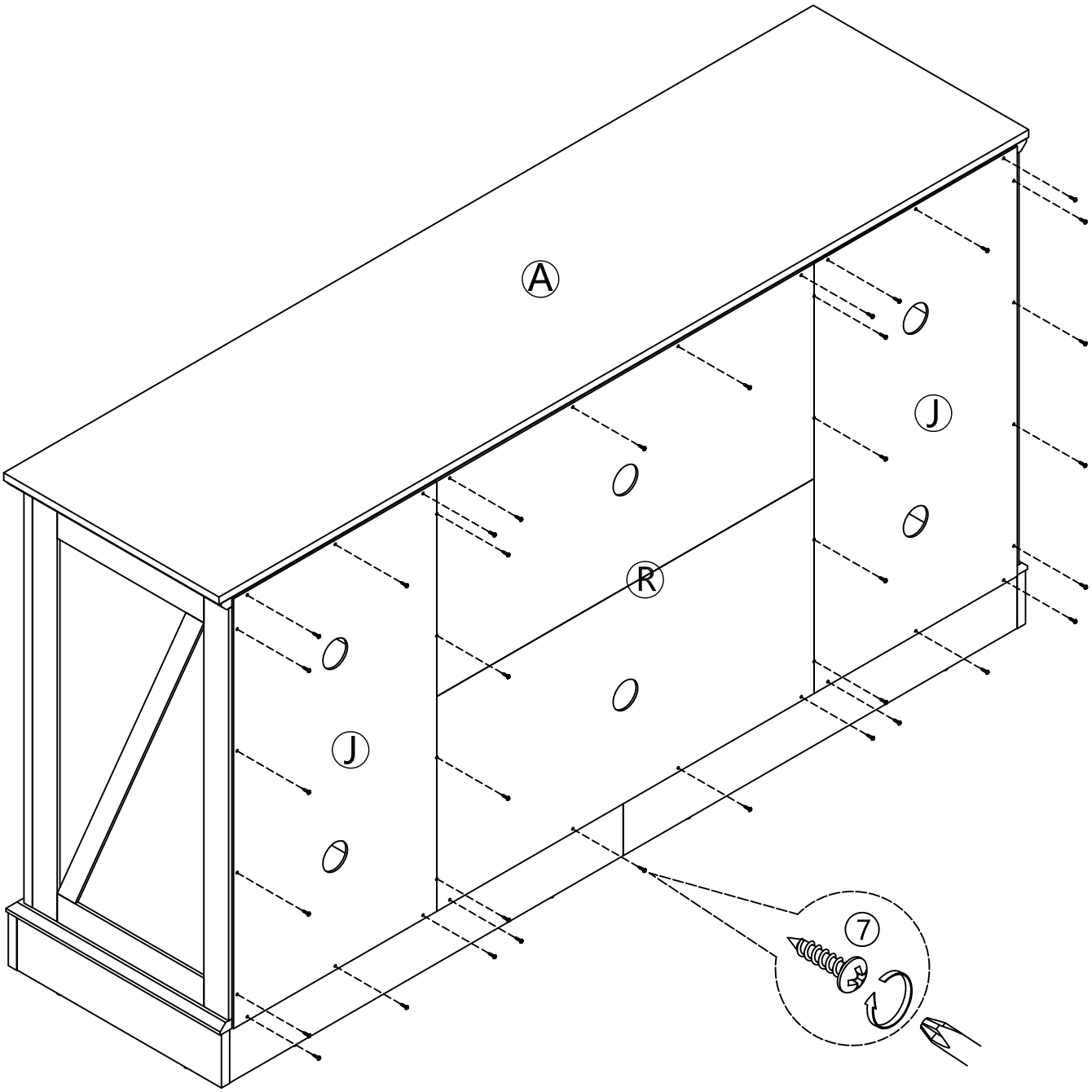

STEP 16

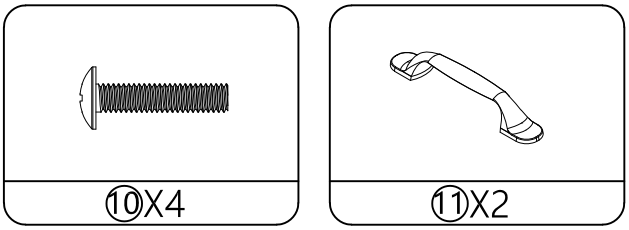

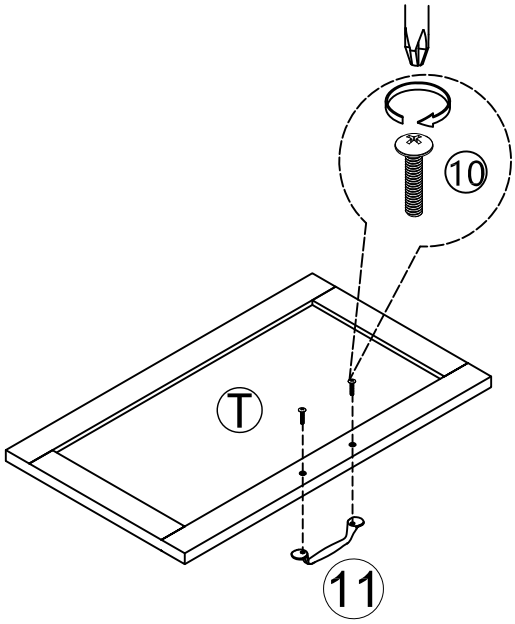

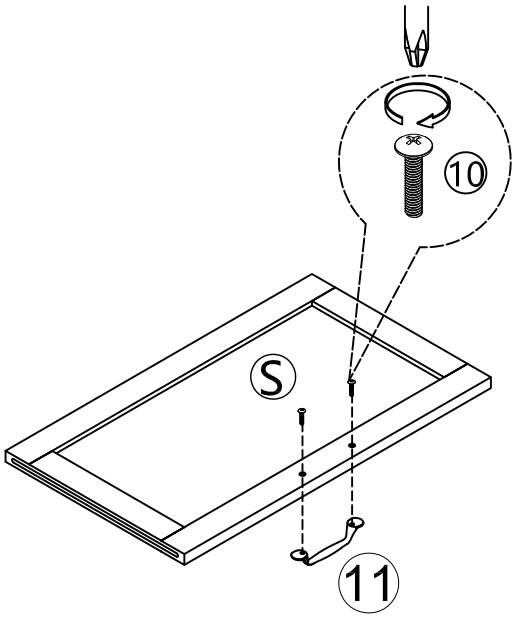

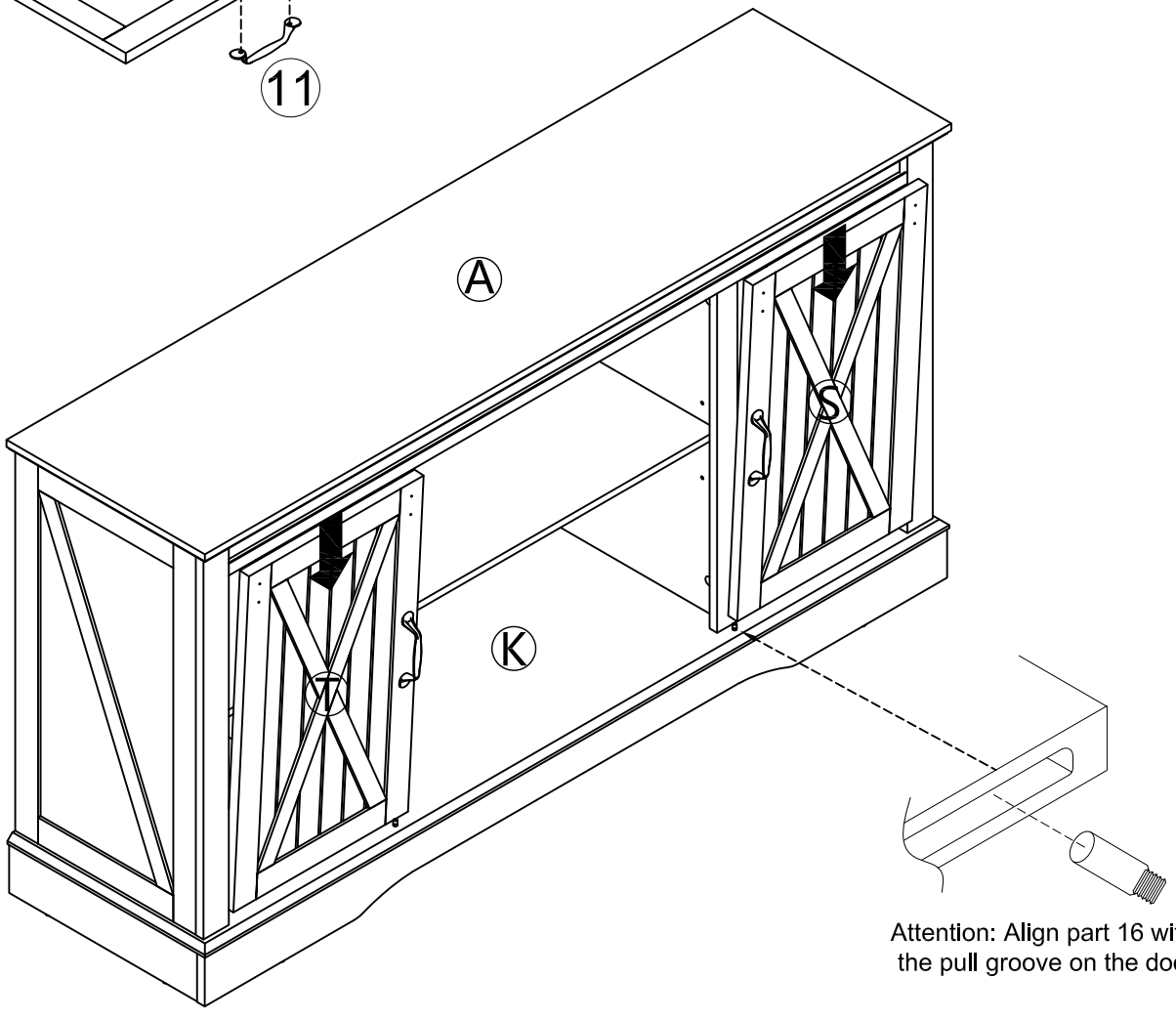

Attention: Align part 16 with the pull groove on the door

STEP 17

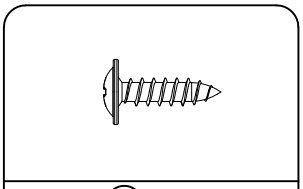

⑧X8

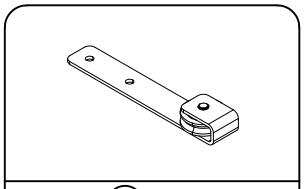

⑫X4

